U.S. Army Corps of Engineers
Water Resources Support Center
Institute for Water Resources

DEVELOPMENT OF PROTOTYPE SOFTWARE FOR RISK-BASED BENEFIT-COST ANALYSIS OF MAJOR REHABILITATION PROPOSALS

PHASES I AND II

DTIC
ELECTE
DEC 0 9 1994
S D
F

This document has been approved for public release and sale; its distribution is unlimited.

DTIC QUALITY INSPECTED 5

September 1994

IWR Report 94-R-5

DEVELOPMENT OF PROTOTYPE SOFTWARE FOR RISK-BASED BENEFIT-COST ANALYSIS OF MAJOR REHABILITATION PROPOSALS (PHASES I and II)

FINAL

by

Richard M. Males
Walter M. Grayman
Craig A. Strus

Planning and Management Consultants, Ltd.
Rt 9 Box 15 (Hwy 51 S)
P.O. Box 1316
Carbondale, IL 62903
(618) 549-2832

Accesion For
NTIS CRA&I ☑
DTIC TAB ☐
Unannounced ☐
Justification
By
Distribution
Availability
Dist
A-1

for the

U.S. Army Corps of Engineers
Institute for Water Resources
7701 Telegraph Road
Alexandria, VA 22315

19941202 133

September 1994

IWR Report 94-R-5

TABLE OF CONTENTS

LIST OF FIGURES vii

LIST OF TABLES vii

PREFACE ix

ACKNOWLEDGEMENTS xi

EXECUTIVE SUMMARY xiii
- OVERVIEW xiii
- HYDROPOWER REPAIR MODEL xiv
- SIMULATION PROCESS xv
- USER INTERFACE xvi
- NAVIGATION REPAIR MODEL xvii
- CURRENT STATUS xviii

CHAPTER I. INTRODUCTION 1
- BACKGROUND 1
- OVERVIEW OF REPORT 2

CHAPTER II. ECONOMIC EVALUATION APPROACHES 3
- GENERAL FRAMEWORK 3
- MONTE CARLO SIMULATION 4
- SPREADSHEET IMPLEMENTATIONS 5

CHAPTER III. PROTOTYPE MODEL CONCEPTS 7
- OBJECT-ORIENTED APPROACH 7
- HIERARCHICAL FRAMEWORK AND OBJECT REPRESENTATION 7
- PROBABILITY OF UNACCEPTABLE PERFORMANCE (PUP) 8
- CLASSES 9
- TIME-STEPS AND ITERATIONS 10
- COST-BENEFIT CALCULATIONS 11
- POLICIES 12
- DISPLAY OPTIONS 13

CHAPTER IV. LITERATURE REVIEWS 15
- OVERVIEW 15
- TECHNICAL LITERATURE REVIEW 15
- REHABILITATION PROPOSAL REVIEW 16
- NAVIGATION FACILITIES 17
- OTHER FACILITIES 21
- SUMMARY OF APPLICABILITY OF PROTOTYPE MODEL 21

CHAPTER V. HYDROPOWER SIMULATION MODEL 23
PHASE I MODEL 23
OPERATION OF THE PHASE I MODEL 24
MODEL CHANGES INTRODUCED IN PHASE II 25
IMPLEMENTED MODEL CHANGES 25
PHASE II MODEL INPUT AND STATE DATA 29
INTERFACE ENHANCEMENTS 31

CHAPTER VI. NAVIGATION MODEL DESIGN 35
OVERVIEW 35
NAVIGATION MODELING APPROACH 35
DESIGN MODELING ISSUES 36
EVENT-BASED NAVIGATION MODEL 39
SIMPLIFIED NAVIGATION SIMULATION MODEL 40
DISCUSSION 43

CHAPTER VII. RECOMMENDATIONS AND NEXT STEPS 45
SUMMARY OF RESULTS 45
HYDROPOWER MODEL 45
NAVIGATION MODEL 46

APPENDIX A: TECHNICAL LITERATURE REVIEWS A-3

APPENDIX B: REHABILITATION PROPOSAL REVIEWS B-3
BULL SHOALS POWERPLANT UPRATE STUDY - JULY 1991 . . . . . B-3
THE DARDANELLE REHABILITATION REPORT - JULY 1991 . . . . . B-5
BONNEVILLE REHABILITATION REPORT - MARCH 1992 . . . . . B-9
WOODRUFF REHABILITATION REPORT - FEBRUARY 1993 . . . . . B-13
HARTWELL REHABILITATION REPORT - MARCH 1993 . . . . . B-17
MISSISSIPPI RIVER, LOCKS AND DAMS 2-10 REHABILITATION EVALUATION REPORT - SEPTEMBER 1988 . . . . . B-21
DRAFT PROGRAMAMATIC IMPACT STATEMENT MAJOR REHABILITATION EFFORT MISSISSIPPI RIVER LOCKS AND DAMS 2-22 ILLINOIS WATERWAY FROM LAGRANGE TO LOCKPORT LOCKS AND DAMS - SEPTEMBER 1988 . . . . . B-25
MISSISSIPPI RIVER ROCK ISLAND, ILLINOIS LOCK AND DAM NO. 15 MAJOR REHABILITATION REPORT MAY 1991 . . . . . B-29
MISSISSIPPI RIVER, LOCKS AND DAMS 11-22 APPROACH IMPROVEMENTS REHABILITATION EVALUATION REPORT - MAY 1991 . . . . . B-33
THE LOWER MITER GATE REPLACEMENTS AT BRANDON ROAD, DRESDEN ISLAND AND MARSEILLES LOCKS AND ROCK WALL RESURFACING AT LOCKPORT LOCK REHABILITATION EVALUATION REPORT - JUNE 1991 . . . . . B-37

MISSISSIPPI RIVER FULTON, ILLINOIS LOCK AND DAM NO. 13 MAJOR REHABILITATION REPORT - JUNE 1991 . . . . . B-41
GULF INTRACOASTAL WATERWAY, TEXAS GALVESTON TO CORPUS CHRISTI SEGMENT MAJOR REHABILITATION REPORT - JUNE 1992 . . . . . B-45
MISSISSIPPI RIVER LOCK AND DAM NO. 25 MAJOR REHABILITATION REPORT - JUNE 1992 . . . . . B-49
BURNS WATERWAY HARBOR, INDIANA, BREAKWATER MAJOR REHABILITATION EVALUATION REPORT - MARCH 1993 . . . . . B-53
UPPER MISSISSIPPI RIVER LECLAIRE, IOWA LOCK AND DAM NO. 14 MAJOR REHABILITATION REPORT - JUNE 1993 . . . . . B-57
MISSISSIPPI RIVER LOCK AND DAM NO. 24 MAJOR REHABILITATION REPORT - JUNE 1993 . . . . . B-61

APPENDIX C: PHASE II DATA MODEL AND TABLE LISTINGS C-3

APPENDIX D: PHASE II PROCESSING FLOW D-3

LIST OF FIGURES

FIGURE ES-1: HIERARCHICAL FRAMEWORK FOR REPRESENTING HYDROPOWER PROJECTS xiv
FIGURE ES-2: GRAPHICAL DEVELOPMENT OF MODEL HIERARCHY xvi
FIGURE ES-3: DATA ENTRY SCREEN FOR COMPONENTS xvii
FIGURE ES-4: GRAPHICAL DEVELOPMENT OF FUNCTIONAL RELATIONSHIP xvii
FIGURE ES-5: GRAPH OF RUNNING AVERAGE OF COST xviii
FIGURE ES-6: SUMMARY OUTPUT OF SIMULATION xviii
FIGURE II-1: HIERARCHICAL FRAMEWORK FOR REPRESENTING HYDROPOWER PROJECTS 3
FIGURE II-2: ECONOMIC EVALUATION PROCEDURES SCHEMATIC 4
FIGURE IV-1: EXAMPLE EVENT TREE - ST. LOUIS DISTRICT 19
FIGURE IV-2: EXAMPLE EVENT TREE - ROCK ISLAND DISTRICT 20
FIGURE VI-1: NAVIGATION LOCK 38

LIST OF TABLES

TABLE III-1: RISK SIMULATION CLASSES 10
TABLE IV-1: CORPS MAJOR REHABILITATION REPORTS REVIEWED BY STUDY TEAM 18

PREFACE

This report documents the work done on the enhancement of a prototype simulation model for the risk-based economic analysis of proposals for major rehabilitation projects of Corps of Engineers' facilities, during the period from September 1993 through October 1994. The original concept, design, and prototype development of the model began in December 1992 and the initial phase of the work, the building and testing of a Phase I prototype, concluded in August 1993, with an implemented prototype. This work was documented in an unpublished technical report for the Institute for Water Resources, parts of which are abstracted herein. The success of the initial model development, in particular in terms of ease of use, flexibility, and speed of operation as compared to existing, spread-sheet based methods, led to the determination to pursue further prototype development. The current work, Phase II, included additional efforts involving review of existing rehabilitation proposals, enhancement of the model, enhancement of the user interface, and conceptual design and proof-of-concept testing of a model oriented towards navigation projects.

ACKNOWLEDGEMENTS

PMCL would like to thank Michael R. Walsh and David Moser of the United States Army Corps of Engineers, Institute for Water Resources, Technical Analysis and Research Division, technical monitors for the project, for providing necessary insights and guidance during the development of the models; Richard M. Males of RMM Technical Services, Inc. for his role in system design and model implementation; and Walter M. Grayman, Consulting Engineer, for his contributions to system design, literature research, and development of the graphical user interface. Mr. Craig A. Strus, PMCL, was involved in system design, interface development, model testing, and the literature research. Mr. Scott Eguires, PMCL, was involved in interface development and testing.

EXECUTIVE SUMMARY

OVERVIEW

Since December, 1992, the Institute for Water Resources (IWR) has been engaged in research and development of improved models and computer software for analysis of major rehabilitation proposals. Corps' guidance for the development of these proposals mandates a risk-based probabilistic analysis of unsatisfactory performance, and the resultant economic consequences. Implementation of risk-based techniques has, to date, been largely through the development of site-specific, spreadsheet-oriented Monte Carlo simulation models. These models, while providing numerical solutions to specific problems at hand, are slow to operate, inflexible, difficult to parameterize, and difficult to understand. The work carried out at IWR is oriented towards providing better models that are more general, easier to use and understand, and faster.

An initial phase, from December 1992 through August of 1993, involved re-examining the underlying theoretical approach used by the spreadsheet models. An examination of the basic constructs of the model, in which a facility is represented as a hierarchical group comprised of features, sub-features, and components, showed that an 'object-oriented' approach to representing each of these entities could provide the needed flexibility and clarity of structure that was desired. A literature review was conducted to determine if any prior work was carried out using these techniques, and to see what generalized tools might exist. While some related work was found, nothing specifically oriented towards an object-oriented approach to the problem at hand was uncovered.

Rehabilitation projects within the Corps of Engineers fall broadly into two general types: hydropower and navigation. Initial research efforts were devoted towards development of a single model that would handle both kinds of problems, but a deeper understanding of the issues has led to the evolution of two separate models, one for hydropower and one for navigation. The C++ programming language was selected for model implementation. The model was developed using the rapid application development methodology, involving a brief initial design effort, followed by generation of a series of operational programs with increasing capabilities, which are then reviewed and revised. At present, the hydropower model, known as HYDROPOWER REPAIR (Risk-based Economic Program for the Analysis of Investments for Rehabilitation) has been developed through a number of prototype versions, and used on test data sets. This model, oriented primarily towards hydropower rehabilitation proposals, proved to have close to a hundred-fold speed advantage over a comparable spreadsheet model, while providing additional data and statistical summaries. In the first phase of work, a simple text-based user interface and graphical display capabilities were incorporated into the model.

In the second phase of work, from September of 1993 through October of 1994, a number of extensions to the HYDROPOWER REPAIR model were developed, incorporating additional capabilities and an improved user interface using the Windows (tm) graphical user

interface environment (programmed using Microsoft Visual Basic (tm)). As the distinct needs of the hydropower and navigation problems became clearer, design and initial development of a model for navigation proposals was carried out. The navigation model is under development, with an initial 'proof-of-concept' model complete, and detailed conceptual design ongoing. Due to the nature of object-oriented approaches, the navigation model will borrow heavily from the hydropower model technology, significantly shortening the projected development time for the full navigation model. Both the hydropower and navigation models are expected to be used in beta testing in the development of rehabilitation proposals in FY 1995.

HYDROPOWER REPAIR MODEL

A facility to be analyzed is modeled as a three-level hierarchical system (Figure ES-1). The facility contains a single 'feature' at the top of the hierarchy. A feature is composed of 'sub-features', which are themselves composed of 'components' at the lowest level. A feature is analogous to a project, e.g. a hydropower generating plant. Benefits of operation accrue to the feature. Sub-features are definable operational parts of the feature, whose operating status determines the output of the feature, e.g. power generating units. Components are the parts of the sub-feature that can degrade and perform unsatisfactorily in a variety of modes (e.g. turbines and generators), and which must be repaired or replaced. Rehabilitation is directed at the component.

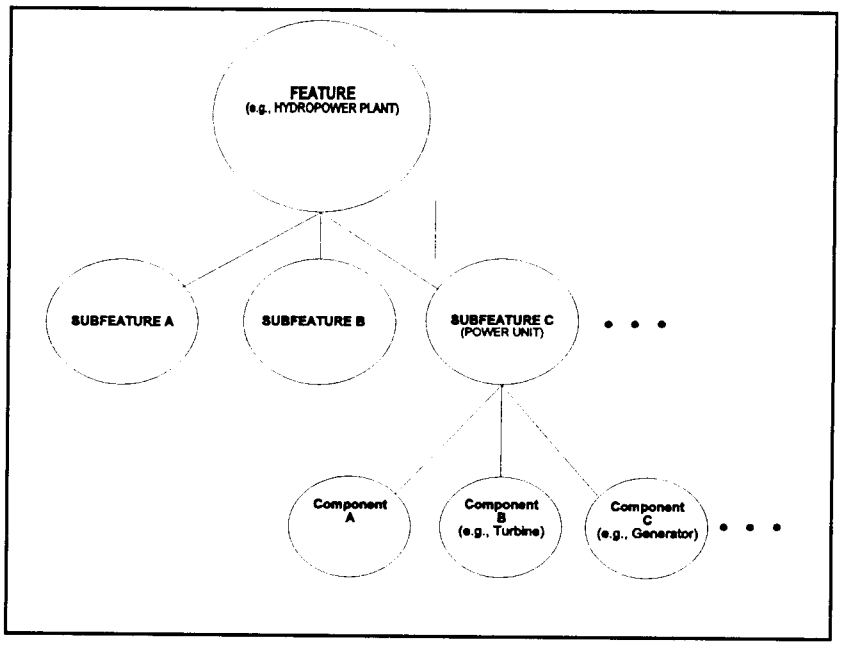

FIGURE ES-1: HIERARCHICAL FRAMEWORK FOR REPRESENTING HYDROPOWER PROJECTS

Data required for the model is related to the hierarchical structure above, and includes:

Data for the overall simulation

- the hierarchical relationship of the feature, sub-features, and components;
- the number of time steps in a life cycle;
- the number of iterations of the simulation to be run;

- controls on the level of output desired from the simulation;
- the interest rate to be used;
- the particular rehabilitation/repair policy to be used in the simulation;
- information on the proposed rehabilitation plan, defined as performing a rehabilitation, at a known cost, on a given component or components, at a specific time period of the life cycle, with a defined value of the component probability of unacceptable performance (PUP) after the rehabilitation.

Feature Data

- an opportunity cost curve based on the output of the feature;
- feature descriptive information

SubFeature Data

- subfeature descriptive information;
- subfeature output capacity;

Component Data

- information on the initial condition of the component, as well as a functional relationship expressing the degradation of condition of the component [as expressed by the probability of unsatisfactory performance (PUP) over time];

- cost and duration of repair, and a revised value of the PUP after repair, for each component;
- information on the pre-repair and post-repair operation and maintenance cost for each component;

Output includes costs for each iteration of the simulation, statistical summaries over all iterations, and optional detailed information on the behavior of each component, sub-feature, and feature at each cycle of the simulation.

SIMULATION PROCESS

The simulation steps through the life cycle for each iteration, testing components for unacceptable performance at each time step. The PUP is the key to determining unacceptable performance. At each time step, a uniform random number between 0 and 1 is generated for each component. The random number is checked against the PUP that has been determined for that component. If the random number is greater than the PUP, the component is assumed to perform unsatisfactorily in that time step, repair costs are calculated, the component is taken out of service for a set period of time for repair, and the PUP is reset to a lower value (lower probability of unsatisfactory performance) based on the repair. The sub-feature containing the

component is not in service during the duration of the repair, thus reducing the output of the entire facility. If the random number is less than the PUP, then the component is assumed to perform satisfactorily and the PUP is degraded some amount to reflect some deterioration over time. All costs are discounted and a present value of costs is calculated for each iteration of the simulation. Usually, several thousand iterations are required to develop a distribution and expected value of risk costs for the alternative. Analyses are developed for the base case and for advance rehabilitation options. Alternatives are judged based on their benefits and costs. Four types of costs (discounted to present value) are identified: investment costs (cost of the rehabilitation that is done at the beginning of the period to improve reliability and reduce the likelihood of unacceptable performance in the future); maintenance costs; repair costs (dependent upon the failure modes and frequencies); and opportunity costs (value of the lost output). The benefits are calculated as the reduction of costs below the baseline and the costs are the capital investment and other expenditures required to implement the alternative.

USER INTERFACE

Parameterization of the hydropower model can require a good deal of data, including: information on the hierarchical representation; parameterization of a feature, sub-features, and components; and functional relationships expressed as piece-wise linear graphs. All of this information is stored in data base files in a relational data base structure, that are accessed by the simulation model. The simulation model takes data from the data base to define the simulation conditions, and stores summary results back into the data base, allowing for easy comparison of alternatives. Detailed results of each simulation are also available, to assist the user in determining if the simulation is behaving properly, and to allow for more extensive statistical analysis.

To simplify this process, a Windows interface, using Microsoft Visual Basic, serves as a shell surrounding the actual simulation model. This interface allows for graphical specification of the model structure, as shown in Figure ES-2. Parameterization of data for the overall simulation, features, sub-features, and components is accomplished through data

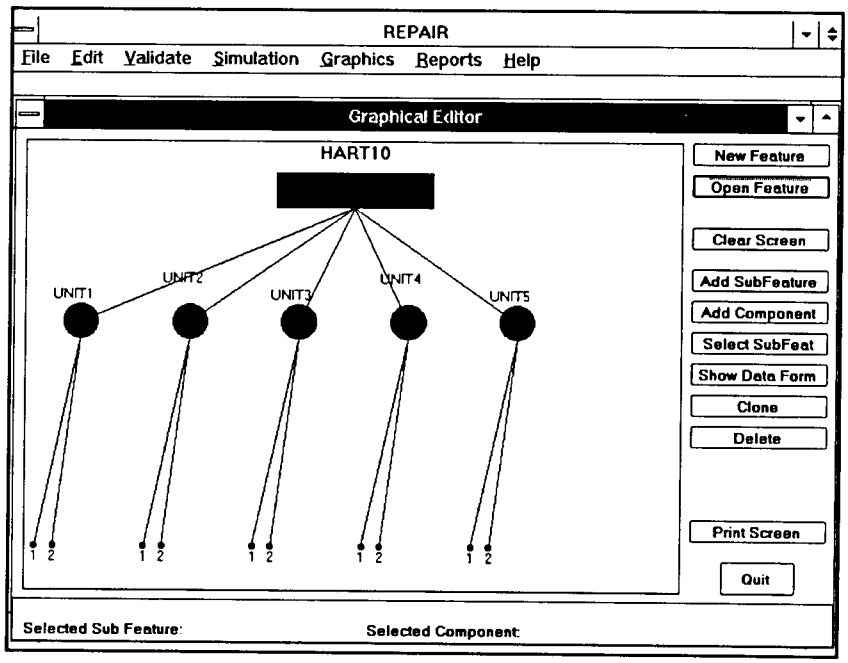

FIGURE ES-2: GRAPHICAL DEVELOPMENT OF MODEL HIERARCHY

entry screens, as in Figure ES-3 , and functional relationships can be defined graphically, as in Figure ES-4. Results of a simulation can be examined graphically (Figure ES-5), as can statistical summaries (Figure ES-6).

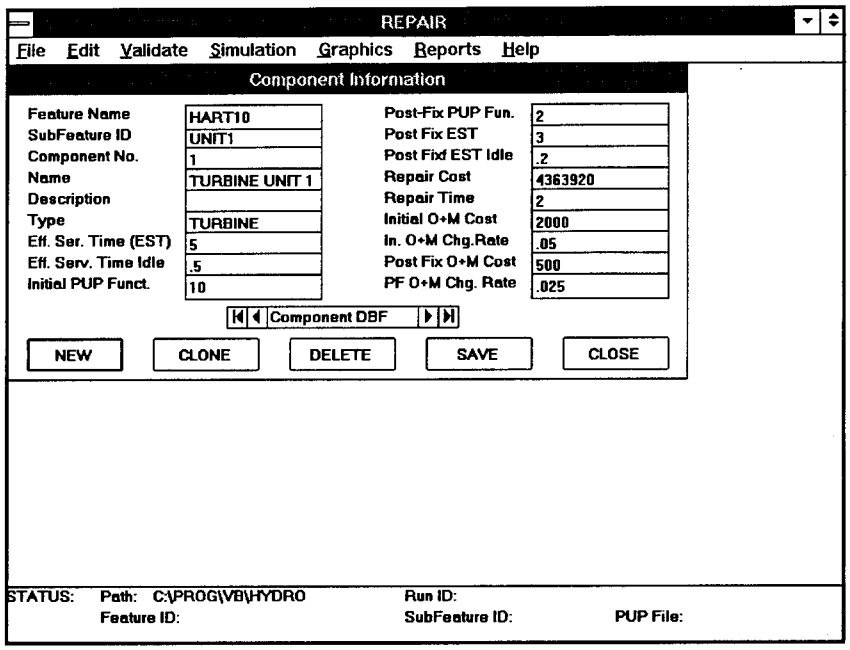

FIGURE ES-3: DATA ENTRY SCREEN FOR COMPONENTS

NAVIGATION REPAIR MODEL

The navigation model is at a relatively early stage of development as compared to the hydropower model, but many of its characteristics have been defined, and the basic approach has been programmed and tested successfully. In some aspects, the navigation model is conceptually more complex than the hydropower model, while in others, it is simpler. The hydropower model is based on a uniform life cycle and set of time steps within that life cycle (e.g. yearly, monthly). Probability of unacceptable performance is tested for each component in each time step. The navigation model is an event-driven model, with events determined by arrival and service times of vessels, which are governed by statistical distributions. The navigation model incorporates both the feature/sub-feature/component model for the actual physical structure (lock, guidewalls, gates, pumps and valves, and control system), as well as a queuing model for the arrival and servicing of vessels through the facility. In the hydropower model, components degrade primarily with time, but in the navigation model, components can degrade through usage,

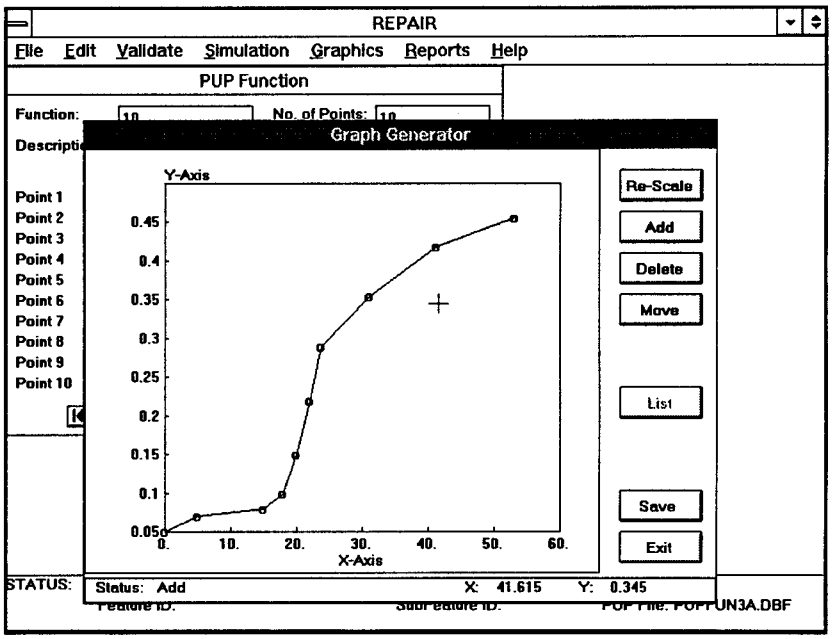

FIGURE ES-4: GRAPHICAL DEVELOPMENT OF FUNCTIONAL RELATIONSHIP

i.e. a barge hitting a gate. In the hydropower model, the basic structure is generic (abstract features, sub-features, and components, whose meaning is defined by the user). In the navigation model, the actual model structure is not abstract; it corresponds with specific physical parts of a navigation facility.

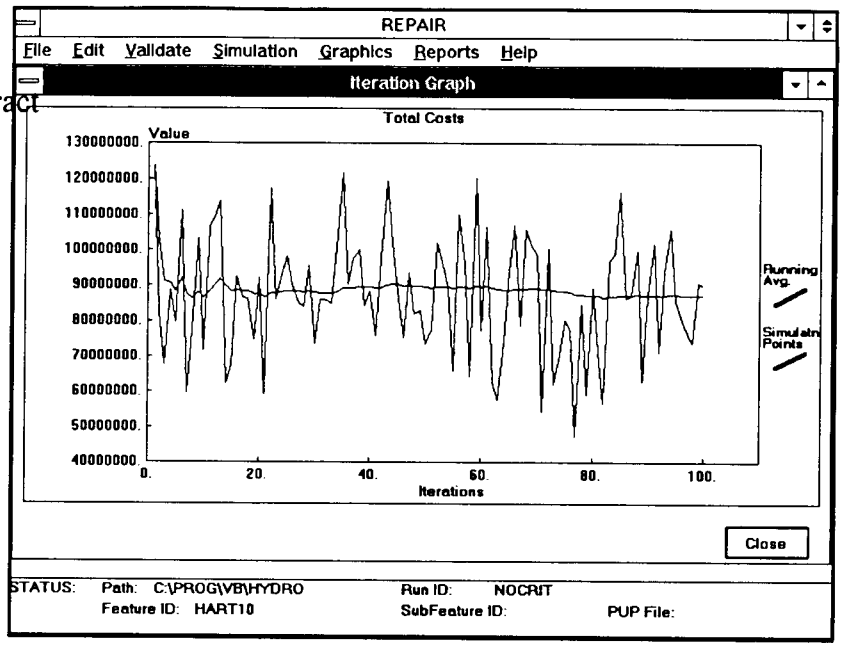

FIGURE ES-5: GRAPH OF RUNNING AVERAGE OF COST

CURRENT STATUS

The hydropower model is available to interested parties who wish to participate in testing, use, and further development of the model in the context of specific rehabilitation proposals. A number of reports and documents exist describing the model, but detailed documentation and user training materials do not exist at present. The navigation model is still in the development stage, with a prototype to be developed in conjunction with a specific navigation site. Preliminary information on the model design and features is available.

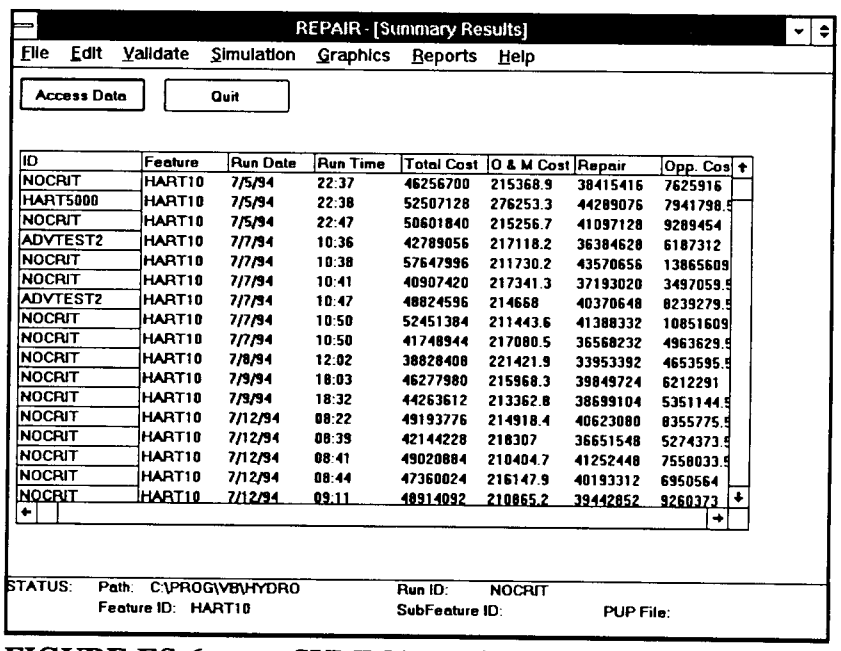

ID	Feature	Run Date	Run Time	Total Cost	O & M Cost	Repair	Opp. Cos
NOCRIT	HART10	7/5/94	22:37	46256700	215368.9	38415416	7625916
HART5000	HART10	7/5/94	22:38	52507128	276253.3	44289076	7941798.5
NOCRIT	HART10	7/5/94	22:47	50601840	215256.7	41097128	9289454
ADVTEST2	HART10	7/7/94	10:36	42789056	217118.2	36384628	6187312
NOCRIT	HART10	7/7/94	10:38	57647996	211730.2	43570656	13865609
NOCRIT	HART10	7/7/94	10:41	40907420	217341.3	37193020	3497059.5
ADVTEST2	HART10	7/7/94	10:47	48824596	214668	40370648	8239279.5
NOCRIT	HART10	7/7/94	10:50	52451384	211443.6	41388332	10851609
NOCRIT	HART10	7/7/94	10:50	41748944	217080.5	36568232	4963629.5
NOCRIT	HART10	7/8/94	12:02	38828408	221421.9	33953392	4653595.5
NOCRIT	HART10	7/9/94	18:03	46277980	215968.3	39849724	6212291
NOCRIT	HART10	7/9/94	18:32	44263612	213362.8	38699104	5351144.5
NOCRIT	HART10	7/12/94	08:22	49193776	214918.4	40623080	8355775.5
NOCRIT	HART10	7/12/94	08:39	42144228	218307	36651548	5274373.5
NOCRIT	HART10	7/12/94	08:41	49020884	210404.7	41252448	7558033.5
NOCRIT	HART10	7/12/94	08:44	47360024	216147.9	40193312	6950564
NOCRIT	HART10	7/12/94	09:11	48914092	210865.2	39442852	9260373

FIGURE ES-6: SUMMARY OUTPUT OF SIMULATION

CHAPTER I. INTRODUCTION

BACKGROUND

The Corps of Engineers operates and maintains over 600 water resource projects across the nation representing billions of dollars of capital investment. As these projects age, the Corps is faced with the prospect of rehabilitating these civil works structures and equipment needed to provide navigation, flood control, hydropower and other water resources benefits to the nation. Major Rehabilitation proposals being developed by Corps Districts offices must identify the best alternative for rehabilitation at a given project and must provide an analysis of net benefits for the best alternative at a site so that there is a means of comparison among the best alternatives at all projects. Most recently, the National Economic Development (NED) criteria have been adopted by the Corps as a basis for performing those cost tests, which has provided a new level of consistency in data gathering and analysis. These rehabilitation proposals are designed to improve the reliability and/or efficiency of existing Corps water resource projects. Reliability improvements reduce the risk that a project will perform unsatisfactorily. Decisions about rehabilitation proposals must rely on risk-based benefit cost analysis, because it is impossible to predict with certainty when a structure or piece of equipment will fail to perform satisfactorily.

It is possible to develop estimates of the probability of "unsatisfactory performance" (UP). It is also possible to determine the cost of UP for a given structure or piece of equipment. The probability of UP and the cost of UP for a given event can be used to develop the expected cost of UP for an entire life cycle of a structure or piece of equipment. Combining this expected cost of UP with normal operating and maintenance costs provides a total baseline cost for the structure or piece of equipment. Alternative rehabilitation proposals are then formulated to reduce the baseline cost. Each alternative can reduce the risk (i.e., the probability of UP, the cost of UP for a given event or both.) Alternatives are judged based on their benefits and costs. The benefits are calculated as the reduction of costs below the baseline and the costs are the capital investment and other expenditures required to implement the alternative. This risk-based economic analysis requires estimates of the probability of UP throughout the expected project and involves complex and tedious calculations. Each alternative must be evaluated over the life cycle of the structure or piece of equipment of interest. Furthermore, the analysis requires many iterations over the life cycle to develop the distribution of expected costs of UP for the life cycle and an overall expected cost of UP for the alternative. This approach leads naturally to the use of Monte Carlo simulation techniques.

The Institute for Water Resources (IWR) Research Division (CECW-IWR-R) recognized a need for the development of automated and consistent techniques which adhere to NED guidelines and generate cost test results through probabilistic, Monte-Carlo simulation techniques. As such, a spreadsheet template was developed and used to develop the analysis in the rehabilitation proposal for the Hartwell hydropower plant located on the Savannah River

in Georgia and South Carolina. The spreadsheet template served as a *proof-of-concept* for automated, risk-based assessments. The existing, spreadsheet-based analysis methods have demonstrated the validity of the approach, but are slow, inflexible, not easily understood and may be overly simplified for the requirements of the economic analysis. An improved methodology is needed to assist Districts in setting up the problem for analysis, performing the risk analysis calculations and interpreting the results.

Phase I of this work effort resulted in the concept, design, and development of a risk-based hydropower model prototype that utilizes object-oriented programming techniques. The object-oriented techniques were found to be highly effective in solving the modelling issues related to hydropower rehabilitation simulation. Phase I included a requirements analysis, database design, prototype simulation model development, a user interface, reports, and a graphics component for displaying results.

The current work effort focussed on enhancing the existing prototype model developed in Phase I. The results of this work effort will assist Corps District personnel in conducting risk-based economic analyses of proposals for major rehabilitation of hydropower facilities. Another goal of the design team was to determine the applicability of the prototype simulation to engineering structures and equipment in other functional areas, in particular navigation. To assess the requirements for this enhanced model, recent major rehabilitation proposals were reviewed in detail and provided the basis for initial designs and a mock-up structure for a navigation Monte-Carlo simulation. The review allowed the design team to assess whether a single simulation model could encompass major rehabilitation proposals in multiple functional areas. Based on this review, which showed certain similarities, but significant differences, between the two types of problems, the determination was made to proceed with further enhancement of the hydropower model, while developing a related model for navigation.

OVERVIEW OF REPORT

This intent of this report is to document the Phase II work efforts, and provide important information from the Phase I work. Chapter II contains a summary of the economic evaluation process used in the simulation modeling. Chapter III summarizes the basic simulation modeling concepts. Chapter IV contains a discussion of the literature reviews carried out in Phases I and II. Chapter V summarizes the hydropower simulation work efforts to date, while Chapter VI is focused on the navigation modeling work. Chapter VII discusses next steps and recommendations. Appendix A contains results of the literature review carried out during Phase I. Appendix B contains the synopses of 16 rehabilitation reports reviewed for this study. Appendix C contains the current hydropower data model and a table listing for each corresponding table. Appendix D contains information on the detailed flow of processing for the Phase II model.

CHAPTER II. ECONOMIC EVALUATION APPROACHES

GENERAL FRAMEWORK

Each project or 'feature' (e.g. a facility for which the analysis is to be performed, such as a hydropower generating plant) is viewed as being composed of sub-features (e.g. generating units), which are themselves composed of components (e.g. turbines and generators) that can degrade and perform unsatisfactorily in a variety of modes, as shown in Figure II.1.

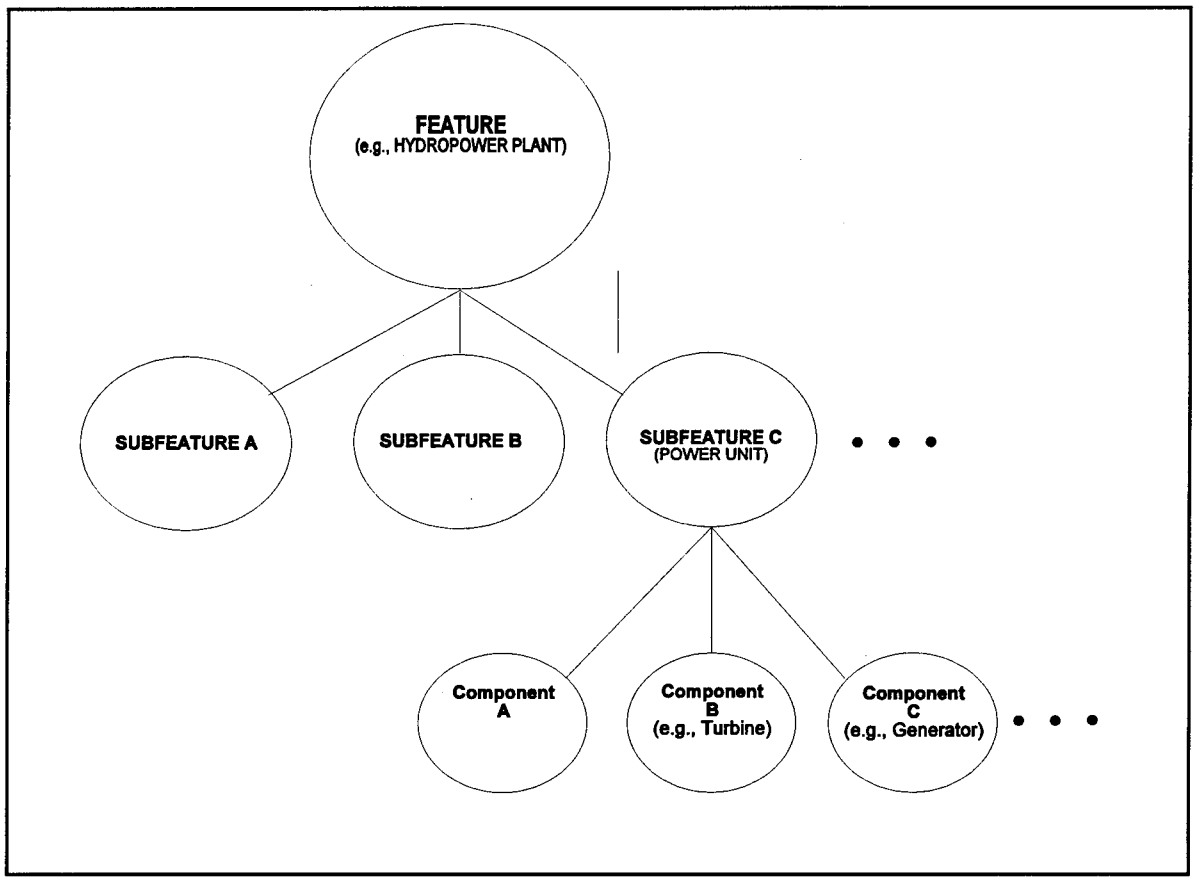

FIGURE II-1: HIERARCHICAL FRAMEWORK FOR REPRESENTING HYDROPOWER PROJECTS

Estimates of the probability of unsatisfactory performance (PUP) for a given component are made, as well as an estimate of the change in this PUP as the component degrades over time. At the same time, a cost of repair, and a revised value of the PUP after repair, are developed for each component.

The economic analysis approach used for evaluation of major rehabilitation proposals uses a life cycle cost analysis. A base case (repair when necessary), and alternatives (advance rehabilitation, then repair when necessary) are specified. The life cycle costs for the base and alternative are calculated. Four types of costs are identified: investment costs (cost of the rehabilitation that is done at the beginning of the period to improve reliability and reduce the likelihood of unacceptable performance in the future); maintenance costs (considered fixed for the facility); repair costs (dependent upon the failure modes and frequencies); and opportunity costs (value of the lost output).

MONTE CARLO SIMULATION

Monte Carlo simulation techniques are used to calculate life cycle costs for the facility. At each time period, a random number between 0 and 1 is generated for each component. The random number is checked against the PUP that has been determined for each component. If the random number is greater than the PUP then, the component is assumed to perform unsatisfactorily in that time period. Repair costs are calculated, the component is taken out of service for a set period of time for repair and the PUP is reset to a lower value based on the repair. If the random number is less than the PUP, then the component is assumed to perform satisfactorily and the PUP is degraded some amount to reflect some deterioration over the time period. All costs are discounted and a present value of costs are calculated for each iteration of the simulation. An iteration is typically one 50 year cycle. Usually, several thousand iterations are required to develop a distribution and expected value of risk costs for the alternative. Similar analyses are developed for the base case and for advance rehabilitation options. Alternatives are judged based on their benefits and costs. The benefits are calculated as the reduction of costs below the baseline and the costs are the capital investment and other expenditures required to implement the alternative.

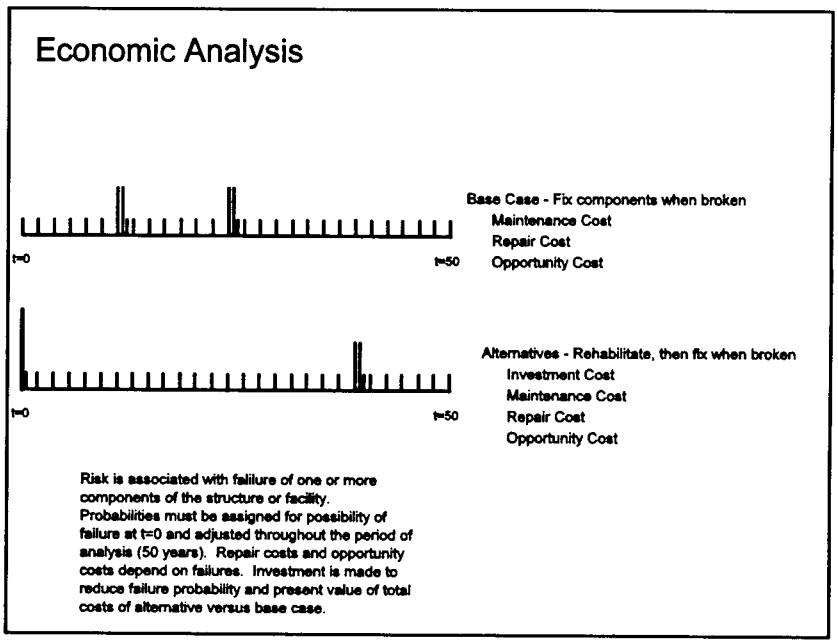

FIGURE II-2: ECONOMIC EVALUATION PROCEDURES SCHEMATIC

Figure II.2 shows a schematic of the economic evaluation procedure that must be done to compare the base case, that is no investment, with alternatives that commit various levels of

investment for the rehabilitation. In all cases, the period of analysis is 50 years. Also, the output of the plant when not broken is assumed to be the same for the base case and all alternatives. Thus, comparisons can be made based on the least cost alternative. In the all cases, the hydropower components will be fixed when they break. There are three categories of cost that must be taken into consideration, maintenance cost, repair cost and opportunity costs.

Maintenance costs includes all labor, material and supplies required to maintain the project in full working order. The maintenance cost includes routine and minor non-routine maintenance that must be accomplished to maintain the project in good working condition. The maintenance cost is usually fixed for a plant of a given type and size and thus is not considered a risk cost component. However, there may be cases where the maintenance cost is dependent on the condition of the plant and thus a risk cost component.

Repair cost is the cost required to fix a component when broken. The repair cost is a risk cost component and can be a significant cost over the life of the project. Each time a component fails to perform satisfactorily or breaks, the repair cost will be incurred.

Opportunity cost is the value of the lost output when the plant is down because of one or more component failures. In a hydropower plant, the opportunity cost is a function of the lost ability to carry demand for power (capacity) and the lost energy not generated during the outage (energy). Calculation of the opportunity cost is problematic, because it is not only a function of the ability of the hydropower plant to produce capacity and energy, but is a function of the demand for that capacity and energy by the power system. Surrogate capacity value and energy values are often used to estimate the opportunity cost at hydropower plants.

All alternatives to the base case include an additional cost, the investment cost, that must be included in the analysis. The investment cost is the cost of the rehabilitation that is done at the beginning of the period to improve the reliability of the hydropower plant and reduce the likelihood of unacceptable performance in the future. Note that in the base case there are two UP events depicted in Figure II.2, while in the alternative cost stream there is only one UP event and that is later in the period of analysis than the base case. This reflects the improvement in the project by investing in the rehabilitation. The key aspect of a risk-based benefit cost analysis is to capture the differences in risk of UP events and to determine the differences in cost that result.

SPREADSHEET IMPLEMENTATIONS

Spreadsheet implementations of the above formulation have been accomplished. While the spreadsheet conforms with accepted procedures for calculating risk costs of major rehabilitation proposals there are difficulties with the spreadsheet approach. The spreadsheet models usually require at least 8 hours to complete a 5000 iteration simulation for a moderately sized hydropower project, using an IBM-compatible 486/33 computer. This is too

slow to analyze many alternatives for rehabilitation at a project. Significant speed increases are needed to allow for interactive analysis by Corps personnel. The spreadsheet model consists of data about units and components in individual cells and a set of macros to conduct the Monte Carlo analysis. It is difficult to change the initial structure of a model. For example, to change the number of units being evaluated requires additions of new data on the units into spreadsheet cells and changes to the macros that run the model. This inflexibility and difficulty to extend the model structure limits the usefulness of spreadsheet models. It is also difficult to grasp the structure and workings of the spreadsheet unless you are familiar with the workings of spreadsheets macros. There is little visual reinforcement of the structure of the problem in the spreadsheet. A analysis tool that helps the analyst understand the structure and workings of the economic analysis would be an improvement.

In addition to being slow, they are inflexible and not easily understood. The spreadsheet models are specific to a facility and set of components, rather than being generalized. Of necessity, the spreadsheet models are simplified representations.

A technology search was carried out to determine previous work in the area. While some commercial products have been used for risk-based simulation (primarily as spreadsheet add-ins), none were deemed suitable, due to the complexities of the current problem, in particular the changes in PUP over time for a component. Accordingly, the decision was made to develop a computer program using a programming language. The strongly physically-based nature of the problem suggested that object-oriented modeling approaches might be valuable, and the C++ language was selected for implementation. An iterative rapid prototyping methodology, in which a series of working programs are generated, each with increasing complexity, was adopted.

The next section describes the development of the new prototype simulation model for risk based economic analysis of major rehabilitation that addresses the four major disadvantages of the spreadsheet model - slow calculation speeds, lack of flexibility and extendibility, a difficult to understand structure and oversimplification.

CHAPTER III. PROTOTYPE MODEL CONCEPTS

OBJECT-ORIENTED APPROACH

The prototype makes use of object-oriented programming (OOP) approaches. Under this approach, the program is viewed as a set of interacting objects. Each object has a certain set of capabilities, and responds to requests with certain behaviors. An object can be thought of as something that 'knows some things and knows how to do some things'. By defining what the object knows, and what it can do, and then by combining these objects in desired ways, the overall endpoint is achieved. For the case of a Monte Carlo simulation, where real world objects are being modeled, the approach is particularly valuable.

In OOP, objects are developed as instances of a class; that is, the knowledge and behaviors are defined for a generic group (the class). Different objects belonging to the same group are limited to the same set of knowledge and behavior (as defined by the class), but each object may be in a different state from other objects of the class at any given time. A class defines a general category of behavior - an 'object' is a specific instance of the class - it behaves as the class behaves, but with its own data. Descriptions of classes used within the model are provided below.

HIERARCHICAL FRAMEWORK AND OBJECT REPRESENTATION

An hierarchical framework for representing a facility was selected, as described above for the simulation model and shown previously in Figure II.1, and generalized. In such a framework, parts of the facility are grouped in a tree-like structure. The representation in the new simulation reflects an object-oriented representation of the project, units and components of a hydropower plant. The parts of the facility are grouped in an inverted tree structure with a single feature at the highest level. The feature is composed of sub-features (currently up to 10), which are themselves composed of components (up to 10 per sub-feature).

The lowest level element in the tree is the 'component' (e.g., a turbine or generator). Components are combined into 'sub-features' (e.g., a unit within a power plant), which are then combined into 'features' (e.g., a power plant). Components are the elements that fail, and incur costs of rehabilitation or repair. For the prototype implementation, it is assumed that a component is either in or out of operation, though it would be possible to represent components as operating at various levels of capability. Risk and reliability factors, and repair and rehabilitation costs, are defined at the component level. Sub-features are operational only if all components of the sub-feature are operational (i.e., both the turbine and generator must be operating for a unit within the power plant to be on line). No provision is made, at present, for levels of operation of a sub-feature - it is either on or off. A feature can operate at different levels of production. The level of operation of a feature depends upon the

operation of the sub-features, which in turn depend on the level of operation of dependent components.

PROBABILITY OF UNACCEPTABLE PERFORMANCE (PUP)

The basic measure of risk is the probability of unacceptable performance (PUP) for a component. This probability can vary from 0 to 1 and depends upon the particular component and its past history. The probability of unacceptable performance can be viewed as the reciprocal of component reliability; the higher the reliability, the lower the probability of unacceptable performance, and vice versa.

In the original formulation, PUP was defined as a linear function of time for each component. This approach proved inflexible, and a more powerful representation was devised. The probability of unacceptable performance is represented, for each component, as a function of the 'effective age' of the component. Effective age is a surrogate for actual age and condition of the component - thus, a 'younger' component in poor condition would have a higher effective age than its chronological age. The effective age normally increases directly with simulation time, but special cases exist - if a component is idle, it may not age as quickly as if it is in use. This recognizes that condition is likely to be a function of both age and usage.

Each component then operates along a given PUP function, with the probability of unacceptable performance given based on the effective age, which is itself a function of the initial condition and time history of usage of the component. For each component, an initial age is defined along with an aging rate (change in age with each time step). If a component is repaired, replaced, or rehabilitated, a new 'effective age' is set for it, and a new PUP function defined (i.e. the component now operates on a different PUP-effective age curve, representing the introduction of new technology).

The current model provides for the specification of PUP functions as piece-wise linear functions containing up to 11 points. A maximum of 100 PUP functions can be defined. As will be seen later, a graphical method of specifying PUP functions has been developed, for ease of user input.

The advantage of this formulation of PUP functions based on effective age is that it should allow for development of generic data for different types of components - turbines, generators, etc., that could then be used for a given facility by setting the effective age of the components in that facility. Thus, a 'library' of PUP functions could be developed, and a component would be described by one of these PUP functions. It is recognized that development of PUP functions is not a trivial effort, and the ability to generalize their usage from facility to facility is highly desirable.

Accordingly, at any time, the 'current risk' is known for each component (through the PUP function). In the Monte Carlo simulation, a random variable is generated for each component for each time step. If, based on a comparison of this risk with the random variable, the component performs unacceptably, then a policy is enacted (repair, replace, rehab, no action), with an associated cost in dollars, time to restore the component, and new initial effective age and possibly new functional relationship for PUP. Note that as the PUP approaches 1 the likelihood of UP is very high and a UP event is likely to occur before the PUP can reach 1.

CLASSES

A class is defined for each entity in the hierarchical framework. A simplified description of the behavior of each class is as follows:

Feature Class: contains sub-features, incurs opportunity costs based on the state of the sub-features, reports on its own state;

Sub-Feature Class: contains components, determines its own state based on the state of components, reports on state;

Component Class: degrades, fails, repairs and incurs repair costs based on a repair policy, reports on state;

As an example of class data, among the data items for the component class are: initial effective age); PUP functional relationship; time to repair (number of cycles); repair cost; post-repair PUP function and effective age; current status of component; number of cycles since component was last out of service; total number of outages; and total time out of service.

Additional classes are used in the model. A simulation class takes user input, runs iterations, summarizes statistics, and writes an output file. An iteration class takes a feature through an entire life cycle and accumulates costs. A random number generator class generates random numbers as needed, and a data base class is used to manage and supply parameter data for the sub-features and components. Classes used in the model are summarized in the accompanying Table III.1.

Alternative repair policies can be specified for a given simulation. Each component is 'aware' of the policy in effect, and responds appropriately when repair is needed. Policies currently implemented are: repair when broken; do not repair if broken; and repair all components in a sub-feature when any component is broken. Other, more complex policies can be envisioned and are readily incorporated into the approach.

TABLE III-1: RISK SIMULATION CLASSES

CLASS	FUNCTIONALITY
Random Number Generator	Generates a random number
Database	Allows reading/writing information from/to a .DBF format file
Component	Degrades, repairs, incurs costs, reports on state (e.g., turbine, generator)
SubFeature	Contains components, reports on state (e.g., unit in power plant)
Feature	Contains subfeatures, incurs opportunity costs, reports on state
Iteration	Takes a feature through a life cycle, accumulates costs
Simulation	Runs an iteration, summarizes statistics

TIME-STEPS AND ITERATIONS

The simulation is performed using a discrete time step. Actions commence at the beginning of a time step (i.e., a turbine breaks) and continue throughout that time step (i.e., the turbine is repaired), or over multiple time steps. Selection of time steps depend upon

(1) the logical occurrence of events and actions
(2) the frequency at which output data is required
(3) policy guidance that might govern when an action should occur
(4) any other external factors (e.g., seasonality) that must be considered

A yearly cycle (time step) is advantageous for ease of use and interpretation, but certain analyses may require a shorter cycle (e.g., repair times may be less than one year.) For the prototype, the following time steps are considered: month, quarter, semi-annual, year. All time dependent functions and rates must be coordinated to act upon the selected time step.

The simulation is performed for the assumed lifetime of the facility. Generally a 50-year lifetime is assumed. For the normal range of discount rates, the present value of any costs or benefits beyond the 50-year period may be considered negligible. In order to incorporate uncertainty in the simulation, some variables are treated stochastically (sampled

from a probability distribution). Therefore, each 50-year simulation will give different results. In order to determine the distribution of results and key statistics (i.e., mean values, variance, etc.), it is necessary to repeat the 50-year simulation many times. The number of iterations required depends upon the number of stochastic variables, the nature of the probability distributions, and the sampling methods employed.

COST-BENEFIT CALCULATIONS

In this conceptual formulation, benefits are not directly measured; rather, opportunity costs are calculated based on failure of the feature to meet output targets of production. The opportunity cost, or loss function, is calculated at the feature level through costs which accrue based on the status of the operating sub-features. All costs are discounted to present value based on the federal discount rate.

In the prototype, the loss function, in dollars, is represented as:

$ = f(amount of output available - amount of output needed).

For ease of operation, the amount available and amount needed terms have been folded together, and represented by measures associated with the number of units in service at any time (e.g. the total generating capacity available from all operating units). In future revisions of the prototype, more complex loss functions might be used that include a stochastic component or measure loss as a function of both power and capacity. Additionally, loss functions might also account for the fact that realistically, different units operate at different levels of production, as well as different production level efficiencies. Therefore, output might depend upon which particular sub-features and/or components are in service. More complex loss functions might be capable of expressing seasonality and stochasticity. Again, even more complex representations of the loss function as f[delta MW, delta kwh] could be envisioned.

It is recognized that facilities, such as hydropower plants, or lock and dam installations, do not operate in isolation, but rather are part of a larger complex (power grid, river system). The need and benefit of power from a hydro plant is dependent on other conditions in the power grid. Similarly, the utility of improving a navigation lock will depend upon the trips generated throughout the river system. There are obvious difficulties of developing an opportunity cost function for a facility as an isolated element. In all likelihood, a macro-scale system model will be needed to define an appropriate cost function for use in the rehabilitation decision at the facility level.

POLICIES

The overall purpose of the project was to develop a prototype computer tool that supports risk-based benefit cost analysis of different repair-rehabilitation policies. In essence, a policy, as used here, defines the choice of activity (repair, replace, rehab, no fix) when a decision is made relative to a component (i.e., either when the component's performance becomes unacceptable, or at some other time, based on advance maintenance). A variety of policies are possible, with varying levels of complexity. Policies might be set:

- globally (for all components in the feature)
- by sub-feature (adopt the same defined policy for all components in a sub-feature, but this policy may vary from sub-feature to sub-feature)
- globally by component type (adopt the same policy for all components of a given type, but the policy can vary from type to type)
- individually (policy is specific to a component and/or feature)
- adaptive (policy is chosen based on component data and simulation statistics)

The default policy is to repair a component when it breaks. The Baseline Condition (against which other policies are to be measured) is simply the default policy.

Other policies that may be considered include:

- Repair when the PUP reaches a defined threshold
- No repair
- Rehab some (user defined) or all components at a given point in time, with the default policy in place prior to that time and after that time
- Define actions based on an engineering approach (e.g. rehab a component at a time when it causes the least impact on overall output)
- Global economic optimization policies, in which choices are made to minimize the expected value of the net cost over time

As noted above, further complexity is introduced by allowing for policies to be introduced at some given time, and be in force for a period of time (e.g., repair everything when it breaks for the next five years, then do a major rehab for a period of two years, then continue repairing when broken.) Such an approach might be consistent with long-term budgeting issues. The combination of the two types of policies (matrix-modifying and non-

matrix-modifying) might also be time-phased. As above, considering time-based policies introduces complexities - what happens when a time-based policy of out of service at a certain time [scheduled maintenance] exists, but the component failed prior to that time. In this case, the component should not be taken out of service, as would be dictated by the scheduled maintenance policy.

In order to simplify the analysis (which is basically comparative amongst policies in nature) it will be assumed that scheduled maintenance always takes place and is the same for all alternatives (so there will be no difference in costs). This in turn requires that PUP degradation rates be estimated assuming that scheduled maintenance does in fact take place.

Seasonal impacts may also be important. It is obviously desirable to schedule repair/rehab when a sub-feature is not needed (e.g., when a particular power plant is not operating all units.) Capturing seasonality requires a time step of less than a year, and requires the association of time steps in the yearly cycle with particular seasons.

INPUT AND STATE DATA

Data can be classified as input data specified by the user, and state variables which define the state of a component, sub-feature, or feature during the course of a simulation. Input data is necessary to initialize the overall simulation and each object within it. Once the simulation is running, the state data defines the status of what is happening at each cycle of each iteration. Under an object-oriented formulation, each object maintains information as to its own state - thus, each component 'knows' how long it has been out of service, and when it expected to be back in service. The organization of state data by object classes allows for great simplification in organizing the model, and in reviewing the performance of the model.

DISPLAY OPTIONS

The simulation results in a vast quantity of output. Methods of displaying the resulting output in a form that it can be analyzed and compared to results of simulations for alternative policies or parameter values are essential. Displays include both graphical and tabular outputs. They may be further classified as either real time displays that are generated and viewed while the simulation is being performed and post-simulation displays. Real time displays are used primarily to track the progress of the simulation and to verify that it is behaving as expected. Post simulation displays are used to analyze the results from a simulation and to compare the results between simulations.

Real time displays investigated within the prototype include the following:

(1) Tabular display indicating the progress of the simulation including number of iterations completed, running average, range of values, etc. (implemented in the prototype)

(2) Graphical display illustrating the status of sub-features during an iteration (implemented in the prototype, but discarded as confusing and unnecessary)

(3) Graphical display illustrating the variation in cumulative average by iteration. This plot should converge to the true long-term average value. (implemented as a post-simulation display option)

(4) Graphical display of histogram showing frequency distribution of costs for the simulation (implemented in the prototype).

Post simulation displays can be used to display the distributions of values (e.g., opportunity costs) in a probabilistic form. Other distributions could include the mean time to failure, average on-line time, etc. by component. Post simulation displays can also be used to compare results between different simulations using the same policy (to assess the adequacy of the number of iterations) or to compare the results of alternative policies. The large amount of data available from the simulation model requires statistical and graphical summarization techniques to be meaningful. At present, two post-simulation displays are available - the above-noted graph showing the moving average of net repair cost, as the simulation proceeds through each iteration, and a graph showing a histogram of the net cost per iteration, both of which can be used to assess the stability and statistical validity of the Monte Carlo simulation process, and determine the required number of iterations for further study. As additional experience is gained, the utility of other forms of graphical and statistical post-processing will be explored in later developments of the model.

CHAPTER IV. LITERATURE REVIEWS

OVERVIEW

In Phase I efforts, the technical literature relating to the simulation problem was reviewed, and a data base of appropriate citations was developed. In Phase II, 16 Corps rehabilitation reports were reviewed to determine the technologies used for risk analysis, and the applicability of the model formulation to these studies.

TECHNICAL LITERATURE REVIEW

A search was conducted for existing, applied technology related to the proposed prototype system. The search included a review of both literature and computer products that might contribute to the design and implementation of the prototype system. The technology search focussed on (1) identification of past studies and products directly related to the development of the prototype, and (2) studies/products that related to some component of the prototype.

Three basic mechanisms were followed in performing the search: (1) telephone or live interviews with persons who have performed work in this area; (2) formal literature searches using computerized systems and selected keywords; and, (3) an informal library and journal survey. The search took on a dynamic form with interviews or literature reviews, such that additional interviews and/or relevant literature were identified and sought.

The interviews and informal literature survey started with names and publications suggested by the Institute for Water Resources (IWR) technical monitors. Approximately 20 separate interviews were made. A significant part of the literature review was centered upon the "Risk Abstracts"; a quarterly review of risk related papers published by the University of Waterloo. The 1991 and 1992 issues, encompassing over 2000 abstracts, were reviewed and 127 abstracts were identified as potentially valuable for this study. These abstracts were then prioritized from 1 (little direct value) to 5 (extremely valuable) and those with a priority of 3 or above (a total of 33 abstracts) were identified for further review if they could be obtained. Another part of the informal literature search included a review of all papers published for the five Engineering Foundation Conferences on "Risk-Based Decision Making in Water Resources".

The computerized literature search made use of two CD-ROM based databases: the NISC Water Resources Abstracts covering the period from 1967 through July 1992, and the Enviro/Energyline Plus database. For each database, various combinations of the following keywords were queried: RISK, RISK-COST, HYDRO, MAINTENANCE, COMPUTERS, MONTE CARLO, REHABILITATION, LATIN HYPERCUBE. Approximately 300 citations

were identified by these searches (though there were many redundancies) between the two databases. Approximately 15 papers were selected from these citations for further review. There was essentially no redundancy between papers identified in the Risk Abstracts and those found in the CD-ROM based search. A third computer search was performed by Michael Walsh of IWR using the Electric Power Research Institute's EPRINET system. The resulting abstracts were examined and five abstracts were identified as potentially useful to our project.

The results of the interviews, literature surveys and review of computer products were summarized in a database comprised of three tables: a literature review table, an interview table, and a computer product table. The contents of the literature review table are presented in Appendix A.

The technology search provided important information related to the present project; its importance being as much in what it didn't find as what it did locate. In general, there have been relatively few past studies that directly relate to the present project. Two papers co-authored by IWR personnel address the conceptual issues of incorporating risk-benefit analysis in rehabilitation and maintenance issues for hydropower plants (Taylor et al, 1991) and lock and dams (Goicoechea et al, 1985). Wunderlich and Giles (Wunderlich and Giles, 1991; Giles et al, 1991) discuss similar issues related to hydropower plants. Pritsker (1992) describes the use of a simulation system called SLAM II, developed in the industrial engineering field, that has been used to address reliability and replacement issues incorporating risk and includes an example of its application to a power station generator system. Several interviewees suggested the potential for the use of two spreadsheet add-ins, Crystal Ball and @Risk, which can be used to perform the type of analyses required for this study.

Many of the other papers reviewed and interviews conducted as part of the technology search provided some potentially useful information associated with some aspect or aspects of the present study. Reliability issues, risk-benefit analysis, Monte Carlo simulation, use of stratified sampling techniques such as Latin Hypercube sampling, hydropower modernization, object-oriented programming, and other issues were addressed by one or more sources. Related issues in the fields of water distribution systems, nuclear power plants, economics, and industrial engineering provided some insights.

In summary, the technology review indicated an interest in the area of risk-benefit analysis of rehabilitation and repair of civil works projects on the part of many people/agencies, and the application of potentially related technologies in many previous studies. However, no computer based tool that fulfills the objectives of the present study was found.

REHABILITATION PROPOSAL REVIEW

At the outset of Phase II, 16 rehabilitation proposals were obtained from Corps sources, and reviewed to examine the particular technologies used, and whether or not the

existing prototype model formulation would be applicable. Table IV-1 lists the rehabilitation reports. The rehabilitation proposals fall into the following categories:

- Hydropower facilities
- Navigation facilities
- Other facilities

Based on the reviews, a great deal of commonality in methods within a type of facility (e.g., hydropower) was found, but significant differences between types of facilities was observed. The general methods and applicability of the Phase I hydropower prototype model to the three types of facilities are described in the remaining sections of this chapter. Detailed reviews of each of the 16 proposals are contained in an Appendix B of this report.

HYDROPOWER FACILITIES

A number of hydropower facilities were reviewed to determine their applicability to the existing hydropower prototype simulation model. The existing prototype simulation model takes a hierarchical view of the problem domain, as described previously. Obviously, because the Phase I prototype used the Hartwell rehabilitation proposal as its test bed, hydropower facilities are most applicable to the model. However, the following paragraphs detail a number of differences the design team considered as additional capabilities were added to the model in Phase II development.

In the Hartwell report, a switchyard is considered a subfeature, as its failure renders all corresponding components inoperative until major rehabilitation occurs. Furthermore, the switchyard could be considered a *critical* subfeature, as its failure may render components corresponding to another subfeature inoperative. In effect then, the failure of a critical subfeature will render all *dependent* components inoperative until rehabilitation occurs. None of the other hydropower rehabilitation proposals were found to contain a *critical* subfeature, and its applicability in the general model was reconsidered. The more recent hydropower rehabilitation proposals closely followed the NED criteria and appeared to be quite applicable to the Phase I prototype model.

NAVIGATION FACILITIES

In all of the navigation rehabilitation proposals, the navigation facilities (locks and dams, flood walls, tainter gates, etc.) were represented as a series of 'units' or 'components'. A unit or component was typically defined as a specific categorical portion of the facility such as the main miter gates in the lock or the tainter gates in the dam.

Generally, the reports described the potential impacts of unsatisfactory performance on a component basis in the form of an event tree. Two example event trees for control systems,

TABLE IV-1: CORPS MAJOR REHABILITATION REPORTS REVIEWED BY STUDY TEAM

BULL SHOALS POWER PLANT UPRATE STUDY	JULY 1991	HYDROPOWER
DARDANELLE REHABILITATION REPORT	JULY 1991	HYDROPOWER
BONNEVILLE REHABILITATION REPORT	MARCH 1992	HYDROPOWER
WOODRUFF REHABILITATION REPORT	FEBRUARY 1993	HYDROPOWER
HARTWELL REHABILITATION REPORT	MARCH 1993	HYDROPOWER
MISSISSIPPI RIVER, LOCKS AND DAMS 2-10 REHABILITATION EVALUATION REPORT	SEPTEMBER 1988	NAVIGATION
DRAFT PROGRAMMATIC IMPACT STATEMENT MAJOR REHABILITATION EFFORT MISSISSIPPI RIVER LOCKS AND DAMS 2-22 ILLINOIS WATERWAY FROM LAGRANGE TO LOCKPORT LOCKS AND DAMS	SEPTEMBER 1988	NAVIGATION
MISSISSIPPI RIVER ROCK ISLAND, ILLINOIS LOCK AND DAM NO. 15 MAJOR REHABILITATION REPORT	MAY 1991	NAVIGATION
MISSISSIPPI RIVER,LOCKS AND DAMS 11-22 APPROACH IMPROVEMENTS REHABILITATION EVALUATION REPORT	MAY 1991	NAVIGATION
LOWER MITER GATE REPLACEMENTS AT BRANDON ROAD, DRESDEN ISLAND AND MARSEILLES LOCKS AND ROCK WALL RESURFACING AT LOCKPORT LOCK REHABILITATION EVALUATION REPORT	JUNE 1991	NAVIGATION
MISSISSIPPI RIVER FULTON, ILLINOIS LOCK AND DAM NO. 13 MAJOR REHABILITATION REPORT	JUNE 1991	NAVIGATION
GULF INTRACOASTAL WATERWAY, TEXAS GALVESTON TO CORPUS CHRISTI SEGMENT MAJOR REHABILITATION REPORT	JUNE 1992	NAVIGATION
MISSISSIPPI RIVER LOCK AND DAM NO. 25 MAJOR REHABILITATION REPORT	JUNE 1992	NAVIGATION
BURNS WATERWAY HARBOR, INDIANA,BREAKWATER MAJOR REHABILITATION EVALUATION REPORT	MARCH 1993	NAVIGATION
UPPER MISSISSIPPI RIVER LECLAIRE, IOWA LOCK AND DAM NO. 14 MAJOR REHABILITATION REPORT	JUNE 1993	NAVIGATION
MISSISSIPPI RIVER LOCK AND DAM NO. 24 MAJOR REHABILITATION REPORT	JUNE 1993	NAVIGATION

one prepared by the St. Louis District and one prepared by the Rock Island District, are shown in Figures IV.1 and IV.2, respectively. The two event trees, and consequently the methods used in their respective analyses, differ in terms of the detail to which the component is defined. The St. Louis District reports identified specific ways in which the component could fail (i.e., relay interlock failure or limit switches failure), identifying the range of consequences (physical and economic) for each. The Rock Island District report treated the component in an aggregated form and did not identify the different failure possibilities. In all cases, the general time scale for a failure and its subsequent repair ranged from hours to months with the most common repair time being in the range of 1 to 3 days.

The primary consequence of a failure at a navigation facility is lock closure or slowdown. The economic impact is dependent upon the number of tows or other boats that are impacted by the closure or slowdown. The number of arrivals generally vary by year (general trend), by season or month, and then randomly by day. In most cases, the consequences of a

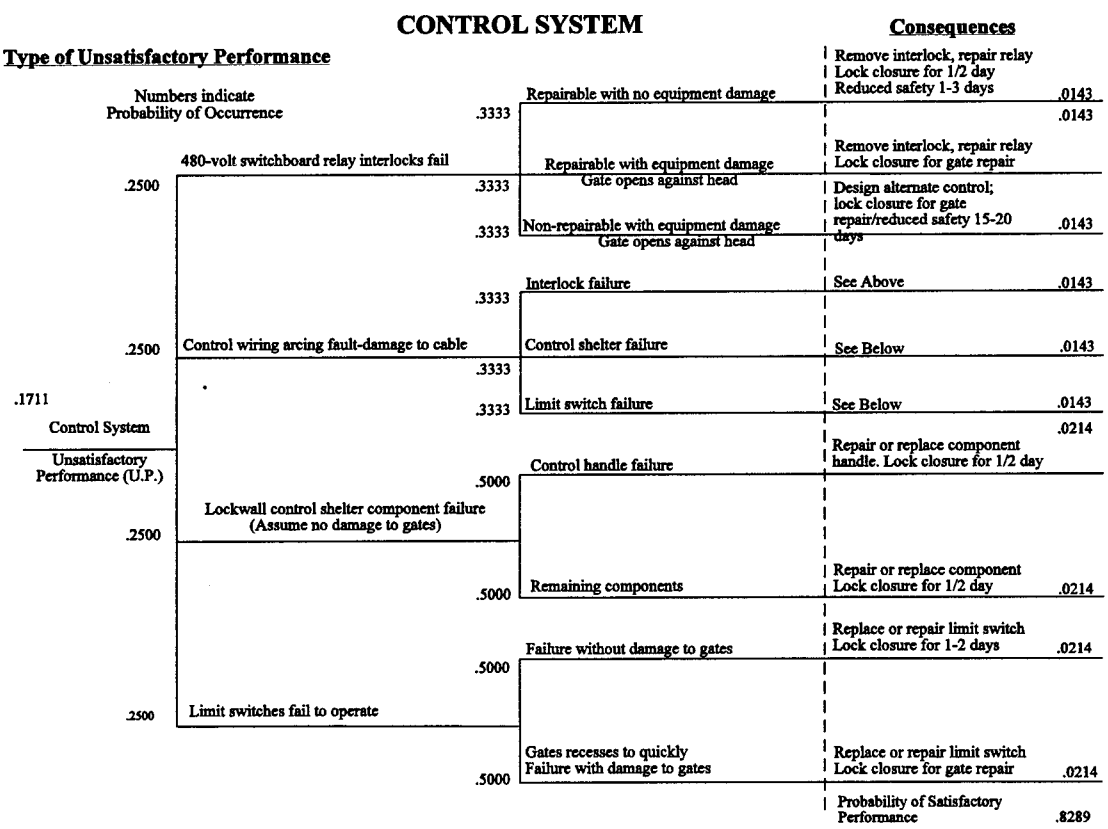

FIGURE IV-1: EXAMPLE EVENT TREE - ST. LOUIS DISTRICT

lock closing or slowdown was represented as a delay to the arriving tows. However, if the closing was of sufficient length (probably greater than a week), alternative shipping modes would be possible, and the resulting economic costs would be the difference between the costs of the alternative mode of transportation and the cost of normal river shipping.

A secondary impact of some failures is that a lock or part of the dam cannot be closed and, as a result, the navigation pool is lost. When such an event occurs,the time to recover the pool depends upon flow conditions. At very low flows, recovery time may be quite long. At higher flows, recovery time may be very short or there may be no loss of pool because the dam is effectively open, allowing all flow through. The loss of pool could be simulated by sampling from a probability distribution (which may be seasonally dependent) or by simulating flow conditions and developing a deterministic relationship between flow and recovery time.

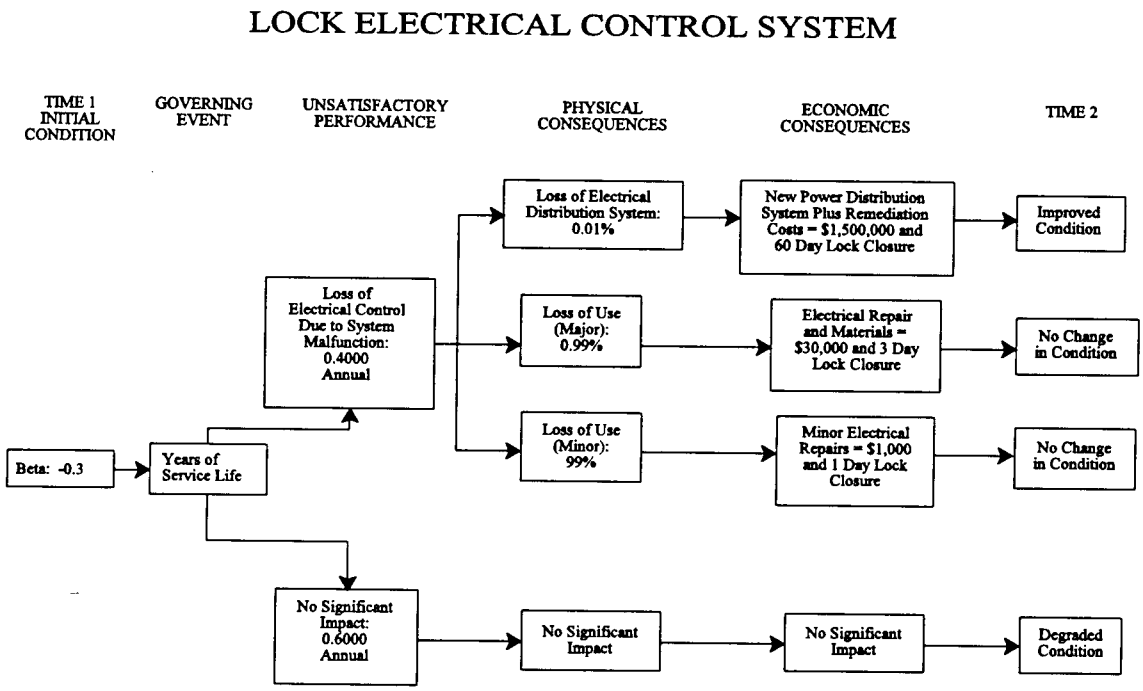

FIGURE IV-2: EXAMPLE EVENT TREE - ROCK ISLAND DISTRICT

Under extreme conditions, a failure during a lockage event could result in damage or destruction of the tow and the barge contents and, in a probable worst case scenario, a major spillage of a hazardous material into the river. It appears that such events carry a very low probability, but due to the potentially very high costs, it may be necessary to consider these consequences.

There is considerable variability (both between Districts and by component) in the effect of an emergency repair of a component on the ensuing probability of unsatisfactory performance (PUP). The degradation rate (rate of change of the PUP during periods of satisfactory performance) also may be dependent upon time, upon the number of lockages, seasonal impacts or flow conditions.

OTHER FACILITIES

Only a single report in the *Other* category, the Burns Harbor Rehabilitation Proposal, involving a breakwater, was reviewed. Therefore, it was difficult to draw many conclusions on the consistency in analysis for harbors or other rehabilitation proposals which do not pertain to hydropower or navigation facilities. However, comparing the breakwater proposal to the navigation and hydropower proposals, it appeared unlikely that the prototype formulation could be directly applied to problems of this nature.

SUMMARY OF APPLICABILITY OF PROTOTYPE MODEL

The initial intent of Phase I efforts was to develop a broadly-applicable model that could be applied to many situations through changes in data alone. The review of rehabilitation proposals was made, in part, to test this assumption. Based on the review of the rehabilitation proposals, the Phase I prototype model was seen to be largely applicable to the hydropower analyses, as envisioned. The model, as formulated, could be applied to some of the navigation situations with modification, but does not appear to be well-suited for this purpose, in large part due to the time-scales of the navigation problem (hours as opposed to months or years), and the event-driven nature of the navigation situation (vessels arriving at a lock). The breakwater situation of Burns Harbor is not represented well by the prototype model formulation.

Accordingly, as described further below, the prototype model was considered to be primarily a hydropower model, and was further generalized to allow for better representation of hydropower situations. A distinct navigation-oriented model was formulated, but is not at the same level of development as the hydropower model. Due to the uniqueness of the Burns Harbor breakwater situation, no attempt was made to develop a model that would simulate this project.

CHAPTER V. HYDROPOWER SIMULATION MODEL

PHASE I MODEL

The initial prototype program developed in Phase I was the first-cut prototype computer program for risk-based benefit-cost analysis of major rehabilitation proposals. The program is written in C++, using the Borland 3.1 compiler and was designed in an object-oriented fashion. The test case for data was taken from a data set for the Hartwell facility, which had been used with prior spreadsheet-oriented approaches, simulating a powerplant with five units, each composed of a turbine and generator. This model was designated 'HYDROPOWER REPAIR' (Risk-based Economic Program for the Analysis of Investments for Rehabilitation). At the end of Phase I, the model satisfied the initial design goals of speed, flexibility, clarity of operation, and, to a somewhat lesser degree, ease of use.

The program operated at over 100 times the speed of the spreadsheet model it replaced, while providing extensive additional data. The user interface was text-based, menu and form-driven, using the Borland TurboVision Application Framework. PUP functions were defined in a simplified, linear fashion. The program provided for a maximum of 10 sub-features, and 10 components for each sub-feature. A simplified opportunity cost based on the number of sub-features operating, independent of which sub-features are operating, was used. Three policies were modeled: no repair; repair a component when the probability of unacceptable performance exceeds the threshold; and repair all components within a sub-feature when any of the components within the sub-feature requires repair. A separate post-processing program provided graphical displays of iterations (average cost for each iteration, running average of cost, and histogram of iteration costs).

In terms of approach and model structure, the object-oriented program structure proved well-suited to the problem at hand, and allowed for ready modification during the course of prototyping. The data-driven parameterization, with data for components and sub-features maintained in a database (.dbf format), allowed for simple description of the system to be modeled, and easy modification (as compared with the spreadsheet formulation, in which changes are extremely complicated). Due to the complexity of the simulation, the ability to obtain and review detailed output showing the behavior of a feature, sub-feature, and component for each cycle of each iteration, was essential in verifying the internal logic of the model. User specification of the level and destination of detailed output information on components, sub-features, and features (no detail, output to screen, or output to file) proved to be extremely valuable, allowing for a high density of output during verification stages, and lesser amounts when the model was operating satisfactorily (which significantly speeds up model performance). This output, as well as summary information for each iteration, is generated in fixed format ASCII files, suitable for import into databases and spreadsheets, for further analysis.

OPERATION OF THE PHASE I MODEL

The majority of the functionality associated with the component, sub-feature, and feature objects is contained in their 'knowledge' of how to 'cycle' themselves. A cycle is a single time step of the simulation. Each object 'knows' what to do when it cycles itself. Thus, the overall program flow is as follows:

The main driver program reads the input data, and sets up a Simulation object. The Simulation object knows how many iterations are needed, and sets up a loop to create an iteration object for the needed number of iterations. Each *Iteration* object creates a *Feature* object, which obtains information from the database, through the *DataBase* object. This allows the *Feature* object to create *SubComponent* objects, which in turn get information from the database about components, and create *Component* objects. Thus, a *Feature* object contains *Sub-feature* objects, which contain *Component* objects.

Once a feature has been initialized by the *Iteration* object, it is 'cycled' for the desired number of cycles. In each cycle, the feature cycles each sub-feature, which in turn cycle the components present in the sub-feature.

Under the problem statement, costs are incurred at the component level, when the probability of unacceptable performance (PUP) reaches a threshold level. Each component, in each cycle, examines its current state (operating or under repair). If the component is operating, a random number is generated (by the random number generator object), and compared with the current PUP. If the number is greater than the current PUP, then performance is unacceptable, and repairs commence, incurring costs. The current state is modified, and the time necessary to repair the component (obtained from the database at the time the component object was created) is recorded. If the random number is less than the current PUP, then the component continues operating, but the current PUP is modified by the degradation of the PUP (again obtained from the database). Note that, under this approach, a random number is generated for each component for each cycle, rather than the 'additive PUP approach' taken in the spreadsheet analysis.

Once the component has been cycled, it reports its current state, and the cost incurred, to the sub-feature. The sub-feature, after examining all of its components, determines its own current state, and reports this back to the feature. The feature at this point can determine the number of operating sub-features, and thus determine any opportunity costs. The feature stores this internally, and reports it to the iteration for each cycle, and the totals are reported to the iteration at the end of the life cycle. The iteration then reports the total back to the simulation, which gathers up the needed statistical information and reports it out. Thus information flows down to the component level, and then back up to the simulation level.

Under this structure, it is relatively simple to identify the responsibilities of each class, and to locate functionality appropriately. Further, a change in the capabilities/behavior of the

component class (for example, to handle more complex policies), is insulated from the behavior of the other classes.

Detailed information on the Phase I model, and documentation and a program walk through, were provided in an internal, unpublished report at the conclusion of Phase I efforts.

MODEL CHANGES INTRODUCED IN PHASE II

At the completion of Phase I, a hydropower prototype simulation had been created to handle a standard feature, subfeature, component simulation problem. Based on review of the prototype, further examination of hydropower rehabilitation proposals, and feedback from individuals using the prototype in training courses, a number of modifications to strengthen and generalize the model were proposed. Of particular concern was:

- the desirability of handling functional relationships for opportunity cost and PUP;
- the need for an improved and clarified user interface and data structure;
- the importance of handling the critical sub-feature (switchyard) problem, in which the behavior of one sub-feature impacts upon the output of other sub-features;
- the need to handle advance rehabilitation alternatives;
- addition of an additional cost item, O&M costs, differing pre- and post-repair.

Each of these items was addressed in the Phase II model.

Other capabilities considered desirable were the ability to handle events less than total failure, and to deal with stochastic, rather than deterministic, repair costs. In addition, the capability to handle spare parts was also considered. These capabilities were not implemented in the current Phase II model.

IMPLEMENTED MODEL CHANGES

Given each of the proposed model changes and an examination of the issues surrounding each change, the first set of prototypes in Phase II included the following capabilities:

- Critical SubFeature (Switchyard) Capability
- Inclusion of Advance Rehab
- Output of Summary Information
- Inclusion of O&M Costs
- PUP Functions

- Allow Idle State for Components and Subfeatures
- Elimination of ASCII input files
- Improvement of relational data structure for input data

Four interacting concepts were defined in the revised hydropower model, as follows:

(1) Scheduled rehabilitation
(2) Subfeature Interactions through the critical sub-feature and sub-feature group
(3) Idling of Components
(4) Different rehabilitation policies (i.e., no repair, emergency repair after failure, repair all components in subfeature if any fail, advance rehabilitation)

This list of changes resulted in a revised hydropower database model and database file structures, as shown in Appendix C.

PUP Functions

The PUP functions are now functions of the 'age', or 'effective service time' [EST], of a component. The initial effective service time is an input for the component. Thus, a component is always operating along a PUP curve, based on its EST. EST may be the actual age, or may be modified by the condition of the component - a component in good shape might have a lower EST, while a component in bad shape would have a higher EST. This approach also allows for 'generic' curves, and curves shared by many components. In addition, the EST can be changed by fractional amounts when a component is in idle for a cycle - thus, a component with an EST of 35, that is idle in a cycle, might have its EST re-set to 35.2, or some other value, while if it is operating in the cycle, then the EST would be incremented by 1.

The Phase II model allows for specification of an initial curve, and an after fix curve, for each component. This is an extension, rather than simply re-setting the EST after a fix and operating along the same PUP curve. The shape of a PUP curve should be a function of technology and investment, thus, the potential for an 'after-fix' curve of different shape. Similarly, scheduled rehab should provide the potential for moving the component to operate along a different curve. After a fix, the component would always operate on the 'after fix' curve at its revised EST, i.e. the model does not deal with the case of multiple curves representing multiple failures/fixes.

Advance Rehabilitation

Advance rehabilitation, as currently implemented, allows for specification of repair/rehab to any component, at any cycle, with an associated investment cost, and new PUP and O&M operating points. An advance rehab plan is defined as a set of component rehab plans. Each component rehab plan implies rehabbing a particular component at a pre-defined cycle, with an associated investment cost, repair time, and new operating points for O&M cost, PUP function, and effective age. Each component rehab plan is specified as a record in a database file. A rehab plan is thus a set of these records. Then, in the simulation, when the defined cycle for each component is reached, the corresponding rehabilitation plan specified in the component record is applied.

Advance rehabilitation, as viewed in most Corps efforts, is assumed to take place at the 0 cycle, but the model generalizes the concept to allow for rehabilitation to take place at any cycle, in effect making it scheduled rehabilitation. Scheduled rehab takes place independent of policy. That is, if a no-repair policy has been specified, and rehab is scheduled for a failed component, then that rehab will take place. The only manner currently envisioned to avoid scheduled rehab is through the use of the user input 'rehab window' for each scheduled rehab. This window is the number of cycles that must have elapsed past an earlier repair, for the scheduled rehab to take place. Thus, if a component is scheduled for rehab on cycle 20, with a repair window of 5 cycles, and emergency repair took place on cycle 16, then no scheduled rehab would take place. If the repair window is 3, then scheduled rehab would take place.

The Switch Yard Problem

The Phase I model does not handle a situation in which the output of one sub-feature is dependent upon the performance of another sub-feature. This is referred to as the 'switchyard' problem. In a hydropower plant, a number of generating units may use a particular switchyard. If the switchyard is not operating, then the output of the generating units is not available, even though they are still capable of operation. The switchyard then becomes a 'critical' sub-feature for the group of generating units that utilize the switchyard.

The Phase I model has certain desirable object-oriented features - only components can fail and be repaired, and only features can generate benefits. The hierarchical approach is strictly maintained (components to subfeatures to features). The switchyard problem, on its face, presents a situation in which some aspect of this existing model cannot be maintained. The switchyard looks like a 'super-subfeature', that sits above the subfeatures, but that can fail. The approach to the switchyard problem adopted in the Phase II model is based on retaining the concept that only components degrade. The solution makes use of the new concepts of subfeature groups, critical subfeatures, and 'non-operating' component and subfeature state.

Sub-Feature Group and Critical SubFeature

Each subfeature can be assigned to a group. This is accomplished by assigning each subfeature a group code, that identifies the numeric group that it belongs to [with a value of 0 meaning that the sub-feature is independent]. A critical subfeature within a subfeature group is a subfeature whose operation is critical to the operation of that group. The state of a critical sub-feature determines the potential state of the subfeature group. That is, if a critical sub-feature is down in a group, then the subfeature group is down. An additional code in the sub-feature record assigns 'critical' status to the sub-feature.

States

In the Phase I formulation, components (and associated sub-features) could occupy one of three states: operating; in emergency repair, or failed and not being repaired. In Phase II, the concept of an 'idle' state is added, working in conjunction with the greater flexibility now available through the PUP function enhancements. Obviously, when a sub-feature consists of a turbine and generator, and one has failed, the other does not operate, but has not failed - it is idled. Under an idle state, degradation should be less likely than under an operating state, as reflected in a lower increment of effective service time per cycle. The idle state also applies to sub-features, when a critical sub-feature in a sub-feature group is down. The other sub-features are then idle, as are their associated components.

Accordingly, the Phase II model allows for the following states of operation for a component:

a) operating;
b) broken and not undergoing repair at present;
c) under emergency repair;
d) under scheduled rehab;
e) idle due to another component in the sub-feature being out of service, idling the sub-feature;
f) idle due to the entire sub-feature being idle, from the switchyard problem causing the otherwise-operating sub-feature to be idle;

and the following possible states for a sub-feature:

a) operating;
b) down - out of service due to component out of service;
c) idle - out of service due to critical sub-feature in group down;

This more complex set of states gives a better picture of what the simulation is doing at any given cycle, allows for the above-mentioned distinction between degradation in operation and degradation in idle, and is important in handling the switchyard problem.

Phase II Processing Flow

The inclusion of advance rehab and the critical feature capability resulted in a move from a model with a fairly straightforward flow, as outlined above for the Phase I model, to a much more complex analysis. When a critical sub-feature is present, the operating state of any sub-feature in that group is dependent on the status of the critical sub-feature. Thus, sub-feature states are no longer independent (governed only by the state of the components of the sub-feature). Each component must now be tested, for all sub-features, to determine a 'tentative' state. Once tentative states have been set, they can be examined to determine if individual sub-features are operational, down, or idle. The sub-feature state then cascades back down to the component state. That is, if a sub-feature has been idled based on a critical sub-feature, then the components of that sub-feature are idled. An idled component cannot come back into service until the controlling object (a component in the same sub-feature that is out of service, or a critical sub-feature for the sub-feature) is back in service. The process is fairly complex, and required extension revisions to the flow of processing within the Phase II model. Additional output from the model was required to allow a user to track and understand the simulation, as it determines operating states for each cycle. A more detailed explanation of the Phase II model processing flow is contained in Appendix D.

PHASE II MODEL INPUT AND STATE DATA

Following is a list of the significant input data and state variables organized by component, sub-feature, feature and overall simulation. All input data is stored as records in database files, as displayed in Appendix C.

Simulation Data

- number of cycles per iteration
- number of simulations (total number of iterations)
- discount rate
- definition of the policy alternative to be used
- parameters defining output/display options
- advance rehabilitation plan to be used

Component Input Data

- initial effective age at start
- component PUP function to be used at start
- initial operations and maintenance cost and rate of change
- effective age after repair
- component PUP function to be used after repair
- initial and after repair rate of change of effective age in idle
- after repair operations and maintenance cost and rate of change
- component description
- component type [coil, turbine, generator]

Component State Data

- current state (operational, under repair, out of service intentionally)
- current effective age
- current rate of change of effective age when idle
- current PUP Function
- time steps since last failure
- cycle when back in service, if out of service
- present value of total incurred cost to date
- total number of failures to date
- total time steps out of service

Sub-Feature Input Data

- sub-feature name/description
- sub-feature capacity measure(s)
- number of components per sub-feature
- sub-feature processing type - critical (affects the feature) or independent
- sub-feature group

Sub-Feature State Data

- current state
- Present value total component costs to date
- # of time steps since last down
- cycle to be back in service
- # of periods in iteration spent in each state

Feature Input Data

- feature name/description
- loss function (delta kwh, delta mw)
- opportunity cost function definition

Feature State Data

- current state (which sub-features are operating)
- current capacity = sum of current Sub-Feature available capacity
- present value of opportunity, total O&M, and total repair costs at current cycle

INTERFACE ENHANCEMENTS

In Phase I, the software interface was character-based and was written in TurboVision, a product of Borland International. Although the initial interface allowed access to each of the databases, it was not very intuitive and required a good deal of knowledge about the structure of each database file. The Phase II simulation front-end runs in the Windows environment and contains a number of enhancements, as described in the following sections.

Interface Tools

The program is written in Visual Basic, which is a product of Microsoft. Visual Basic allows for rapid interface development in the Windows environment when the programmer has learned the basic capabilities and construct of the language. The hydropower repair model contains file dialog boxes and menus typical of a windows-based program. Additionally, a number of features exist in the current interface that would be difficult to accomplish in a text-based interface.

Editing Piece-Wise Functions

The opportunity cost and probability of unacceptable performance functions are piece-wise linear. As such, a graphical editor was developed that allows the user to edit the data for a given function either graphically (by moving pieces of the curve with the mouse) or in a tabular fashion.

Database Capabilities

Each database file (See Appendix B) allows the user to add, delete, clone, and edit records. Multiple database files can be edited at one time. Unlike the Phase I interface, when records are *cloned* or *deleted*, changes will be reflected in databases 'lower' in the hierarchy. For example, if a feature is removed from the feature database, all corresponding subfeatures and components will be removed from the subfeature and component databases. Error checking maintains database integrity by disallowing duplicate records to be *added* or *cloned*. The rehabilitation database maintains a rehabilitation plan for a specific component, which belongs to a subfeature, which belongs to a feature. Thus, when a rehabilitation plan is added or cloned, error checking ensures that the component for the feature and subfeature exists and that the rehabilitation plan identifier is unique.

Graphics

The current hydropower interface allows the user to plot total cost, repair cost, opportunity costs, or o&m costs, with a running average and confidence intervals, for each iteration. The maximum number of points that can be plotted is 10000. A histogram of the same costs can be plotted for as many as 500 intervals. The histograms will display the percentage of points falling into each interval, providing the user with a visual depiction of the distribution.

Reports

The current hydropower interface will generate a report containing all structural data for a specific runid. That is, the user chooses a runid and the feature, subfeature, and component data for the corresponding feature are generated to the printer, a file, or the screen. There is also a data grid that allows the user to view the summary data file.

Graphical Model Construction

The graphical model construction allows the user to build and edit an hierarchical structure consisting of a feature, subfeature, and components, from a simple menu. As the user adds sub-features and components, the hierarchy is displayed graphically on the screen. Thus the user can create a feature, create multiple subfeatures under the feature, and select subfeatures for the addition of components. The actual creation of the physical structure is completely mouse-driven. The graphical capability represents a 'true' windows based front-end in that the physical problem domain is visual, and can be parameterized by 'clicking' on a

specific feature, subfeature, or component object, to obtain an edit form that displays the parameters associated with the selected object. This graphical model construction allows for a much more intuitive method of entering data than was previously possible.

CHAPTER VI. NAVIGATION MODEL DESIGN

OVERVIEW

One of the goals of this project phase was to assess whether the simulation model developed for hydropower was applicable to other functional areas (i.e., navigation). As noted above, based on a review of rehabilitation proposals and further consideration of the nature of the navigation problem, it was recognized that the hydropower model cannot be applied directly to the navigation problem. Too many structural/simulation differences exist. However, the methods (i.e., object-oriented approach) and many of the objects developed in the development of the hydropower model can be conceptually applied to the navigation model. Based on discussions with navigation experts within the Corps, the design team developed a detailed conceptual design for the navigation model, and developed a limited 'proof-of-concept' program to test certain objects and approaches needed for the navigation model.

NAVIGATION MODELING APPROACH

The key differences between the navigation problem and the hydropower model are as follows:

- The time scales associated with repairs of failures at the lock and dam are generally on the order of hours, days and possibly weeks as opposed to the months and years at power plants;

- The factors affecting usage of the lock and dam are generally treated as a random variable (i.e. vessels arrive at different intervals);

- Seasonal variations exist for both vessel arrival frequencies and for probabilities and consequences associated with losing the pool under certain [extremely rare] failure conditions;

- The navigation problem is better represented as 'event-based' (driven by the random inter-arrival times of vessels at a lock) whereas the hydropower problem can more easily be considered as 'cycle-based' (with behaviors of interest, i.e. unacceptable performance, falling at some unknown point within a time step). Under an event-based modeling formulation, time moves forward in 'leaps', when the next event of interest (typically a vessel arrival or the completion of a lockage) occurs. Every event of interest is handled individually. Under a cycle-based formulation, time moves forward in constant increments, and behavior within a time increment is not considered. If multiple

events take place within a time increment, all that can be done is to count and 'lump' them in some fashion, rather than handling them individually. Discretization of the hydropower problem into cycles is more tractable, based on the need to capture the smallest unit of time of interest, typically driven by the long repair periods (months/years) for power plant components. Discretization of the navigation problem at an hourly time scale, to be comparable with arrivals and repair activities, would result in excessive computation.

The initial thinking on development of a navigation model was oriented towards retaining a cycle-based approach, in which statistical information would be used to determine a distribution of the number of arrivals at a lock for a given period (day or week). A 'lock object' would then be treated as a combination of components (as described below), and would respond to the number of arrivals in the period, with unacceptable performance calculations made for each arrival in the cycle. A cycle-based model was designed conceptually, but, on review, the problems of appropriate discretization and lumping of vessel arrivals was seen as quite limiting, and unnecessary if a more realistic, event-based model was developed. An event-based approach was outlined in some detail, and a preliminary proof-of-concept model was developed to test the event-based approach. Following the development of this model, which did indicate the feasibility of implementing an object-oriented, event-based approach, additional design considerations were developed. At the conclusion of Phase II efforts, a proposed detailed design concept for the navigation model has been defined, and is awaiting review.

The following sections provide information on the design approaches for the objects of the event-based model.

DESIGN MODELING ISSUES

The detailed design for the navigation model proposes an event-based model, in which vessel inter-arrival times are random variates (proposed to be based on a gamma distribution). Each arrival generates a vessel object, which enters into one or more queues to be serviced by the lock object(s). The lock object has a service time which is some function of its physical status. At each servicing, probabilities of unacceptable performance for the lock are calculated, and the physical status of the lock object (and hence the associated service time) is re-set if the lock degrades.

The design issues can be conceptualized in two parts:

- issues relating to the 'simulation context', i.e., what larger-scale behaviors are we trying to capture - how much of 'reality' about the total system will be included in the model;

- issues relating to modeling the lock chamber itself, in terms of the detail of modeling, what components are present, failure modes, degradation, etc.

We can have a complex simulation context with a simple lock chamber, a complex context with a complex chamber, or a simple context with a simple chamber. (The simple context/simple lock case is considered to have been the proof of concept model).

Simulation Context

The simulation context defines how much of the 'real world' of navigation will be included within the boundaries of the model. An entire river system can be modeled, but this will limit the degree to which effort and attention can be focussed on any individual part of the system, i.e. a particular lock for which rehabilitation is proposed. It is clear that decisions on such issues as diverting tows when delays appear to be long at a particular lock are not made when the tow arrives at the lock. Rather, there are a number of other factors that are taken into account, long before the tow is in the same pool. Such factors as alternative modal transportation costs, commodity prices, and expected delays at other locks, may all come into play on the individual diversion decision. It is difficult to model all of these factors, even though they are known to be part of the overall system. The concept of the simulation context is used to discuss the model characteristics and boundaries.

Among the issues identified relating to the simulation context for the navigation model are:

- handling multiple lock chambers (i.e. main and auxiliary at a lock);
- separate handling of both upstream and downstream travel;
- inclusion of different vessel types, with separate policies and preferences for certain vessel types (i.e. priorities given to recreation vessels);
- providing for differing tow sizes, and cuts;
- handling of diurnal as well as seasonal variations;
- possibility of pool loss;
- economic impacts (i.e. opportunity cost functions);
- calculation of tow diversions;
- weather-related effects (ice closings);

These issues are largely independent of the level of detail of modeling the lock chambers themselves, as long as that modeling provides us with service times and stall durations as required. Obviously, inclusion of many of these features will increase the complexity of the model, increase data demands, and may stretch our capacity to understand/model particular behaviors.

Lock Chamber

Modeling of the lock chamber(s) can be simplified, in which the chamber behavior is treated as a single entity, or more complicated, in which we maintain individual components (gates, guidewalls, valves, control systems), and derive the chamber behavior from the state of the individual components. If we are interested in determining, for example, the benefits associated with miter gate rehab investment at a site, we need some method of reflecting the improvement in miter gate reliability/performance in the overall lock chamber performance, as improved service times and/or reduced number and time of stalls. For a simplified chamber, we would need to handle this external to the model, in the data describing the service time or stall functions. For the complex model, we would need to develop relationships between the status of the individual components, and the service time and stall rate and duration, as well as relationships between investment in a component, and the status of that component. This implies a more complex description of individual components than we have done in the hydropower model, with performance-related issues (e.g. time to close a gate, speed of chamber filling/emptying as based on valve status) present as well as possible multiple failure modes.

A complex lock can be viewed as consisting of a defined set of objects (guidewall sections, lockwall sections, gates, and valves), representing a 'typical' lock. Each simulation object could have a set of defined behaviors, dependencies, and failure modes. This would allow retention of many of the concepts and objects developed for the hydropower model. There are four guidewalls (GW1-GW4), two lock walls (LW1-LW2), 4 miter gates (MG1-MG4), and two pairs of filling and emptying valves (EV1, EV2, FV1, FV2), as shown in Figure VI-1. Each wall is composed of multiple independent wall sections. Guidewalls can be sheet pile or concrete, and lock walls are concrete. The sheet pile guidewall section consists of three parts -the wall, the foundation, and the anchor. Failure modes for the anchored sheet pile guidewalls are: sheet failure due to corrosion; anchor failure of the tie-back to the deadman, due to corrosion; and undercutting at the toe on the waterside, due to prop wash. For the concrete guidewall, there are two failure modes - anchor failure, in which the wall section slides on its foundation, and gravity failure,

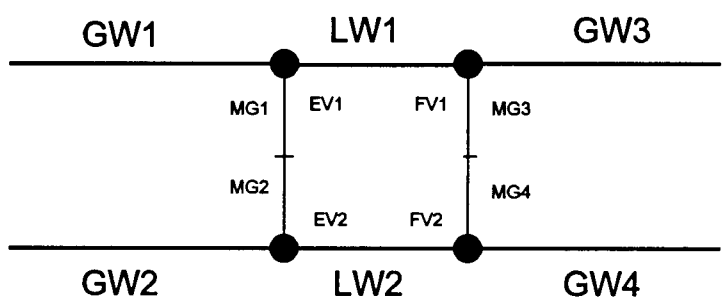

FIGURE VI-1: NAVIGATION LOCK

in which the wall tips over and leans into the channel. The status of the filling and emptying valves determines the speed of filling/emptying the lock chamber. If two of the same kind of valve are out of service, the chamber is out of service. Under this scheme, a lock can be modeled in a fashion that closely matches the actual physical objects present at the lock.

The rate at which a lock can process tows is a function of the status of all of the lock sub-objects. This is a key assumption. The status of the lock sub-objects is assumed to be determined as a combination of age and usage. That is, each lockage may cause a degradation, and aging causes degradation. The Probability of Unacceptable Performance (PUP) functions are a function of effective service life. Each lockage would cause some degradation, as expressed by an increase in effective service life (i.e. accelerated aging), and some finite probability of complete failure, due to collision.

Vessel Object

Each arriving vessel becomes a vessel object. It knows what type of vessel it is (commercial, recreational, tow), what time it arrived, its initial queue position, and its current queue position. In a complex modeling situation, it is possible to generate tows of different lengths, with different values of cargo, all of which can be reflected in the vessel object. Once a vessel has been locked through, the delay is calculated for that vessel, based on its arrival time in the queue. A vessel object ceases to exist, for purposes of the simulation, after it has been locked through.

Queue Object

At least one queue object is required. Vessel objects are placed into the queue object as they arrive, and removed as they are serviced. At any time, the queue length is known. Multiple queues may need to be maintained, depending upon the simulation context (servicing upstream and downstream travel, main and auxiliary locks, and queues separated by vessel type, e.g. recreation vs. tows).

EVENT-BASED NAVIGATION MODEL

After further refinement to the proposed, initial navigation model, the design team decided to move to an event-based approach (EBA). Many of the features of the EBA are similar in character to the initially-proposed cycle-based approach (CBA). The fundamental difference is in the handling of time. Under the EBA, vessel arrival at a lock is based on a gamma distribution, yielding the time until the next vessel arrives. This is in contrast to using a gaussian distribution to determine the number of vessels that arrive during a given cycle

under CBA. The lockage time, is, as before, a function of lock status. Rather than have a clock that ticks off at a constant cycle, time is incremented in 'jumps', based on when the events of interest take place, such an event being either the arrival of a new vessel at the lock, or the completion of a lockage of a vessel. The basic time unit is likely to be hours under EBA, but time can be fractional, as compared to integer under CBA. Thus, a tow can arrive at 154.4 hours after a simulation, and a lockage might take 2.3 hours.

The state of the system, for a simplified model (single queue, simple lock, uni-directional travel), is defined by the following elements:

- Current time (hours from start of simulation)
- Hours to next vessel arrival (hours)
- Time at next vessel arrival (hours from start of simulation)
- Queue length (number of vessels waiting)
- Lock operating state (operating,under repair,rehab,etc.)
- Hours to lock back in service (if out of service)
- Locking duration for next lockage (hours)
- Time at completion of next lockage (hours from start of simulation)

SIMPLIFIED NAVIGATION SIMULATION MODEL

Given the approach and revised approach outlined above, a simplified, object-based, event-based model of queues at a lock was built. The purpose of the model was to test construction techniques and algorithms for the event-based approach, as well as to get a feel for computation times.

The model uses tows of a constant size as the only vessel type, arriving based on an exponential distribution of inter-arrival times, and assumes a simplified lock, in which service time (time for a lockage to be completed) is based on a gaussian distribution. There is no degradation, and no failure in the lock behavior in this version. There is no seasonality. Tows enter into a single queue while awaiting service. Thus, there is no distinction between upstream and downstream passage

The basic metric for system behavior is average delay. Each tow knows its arrival time in the queue, and the time at which the lockage has been completed. The difference between these is the average delay. In addition, the simulation records the maximum delay experienced by any tow, and the maximum queue length.

The model runs until the current time exceeds the specified duration for the simulation. Note that this may leave some tows in the queue (they arrived before the maximum duration, but have not yet been served). The program reports the tows remaining at the end of the duration. As with the hydropower simulation, detailed output can be written to a file (under

user control), and screen display can also be enabled/disabled. In addition, summary information for each run is written to NAVSUM.FIL.

Model Input

User input to the model consists of the following parameters:

Duration	Length, in hours, of the simulation
Arrival	inter-arrival time of tows at the lock (hours), for use with an exponential distribution generator of tow arrivals
Service	Mean lock service time, in hours (used with gaussian distribution of lock service times)
Service_SD	Standard deviation of lock service time
Display	Display flag
Output	Output flag.

These parameters are stored in an ASCII file and are passed to the simulation model as a command-line parameter. A typical input file appears as follows:

```
RUN_ID      RUN1A
DURATION    1000
ARRIVALS    4.3
SERVICE     2.1
OUTPUT
```

Model Output

The primary model output is a tabular report, giving information for each event of interest during the course of the simulation. The initial portion of such output, showing the first 22 hours of a 1000 hour simulation is as follows:

```
Start: TEST1.INP  10/6/1994   15:46

RunID:         RUN1A
Duration:      1000
Arrivals:      4.3
Service:       2.1
ServiceSD:     0.21

CurTime Event Queue  TNextTow  TNextLck Tow# TToNxtTw   Tow#  NxtLockT TDelay
     2.56 A     1     2.87     4.66     1     0.31              2.10
     2.87 A     2    11.84     4.66     2     8.97              2.10
     4.66 S     1    11.84     6.76                  1     2.10     2.10
     6.76 S     0    11.84  1001.00                  2     2.02     3.89
    11.84 A     1    12.75    13.99     3     0.91              2.15
    12.75 A     2    13.49    13.99     4     0.75              2.15
    13.49 A     3    17.24    13.99     5     3.75              2.15
    13.99 S     2    17.24    16.15                  3     2.15     2.15
    16.15 S     1    17.24    18.44                  4     2.30     3.40
    17.24 A     2    17.61    18.44     6     0.37              2.21
    17.61 A     3    22.38    18.44     7     4.77              2.21
    18.44 S     2    22.38    20.65                  5     2.21     4.95
    20.65 S     1    22.38    22.12                  6     1.47     3.41
    22.12 S     0    22.38  1001.00                  7     2.27     4.51
```

where:

CurTime	Current Time, in hours from start of simulation
Event	Event at current time, A = arrival, S=service
Queue	Length of queue
TNextTow	Time at which next tow will arrive
TNextLck	Time at which next lockage will take place (set to simulation time + 1 hour if queue length = 0)
Tow#	For an arrival event, the sequential number of the tow
TToNxtTw	For an arrival event, the inter-arrival time for the next tow after the current one
Tow#	For a service event, the identifier of the tow being locked through
NxtLockT	Amount of time for locking (add to prior TNextLck to get current TNextLck for service events, add to current time to get TNextLck for Arrival event when queue = 1)
TDelay	For a service event, Delay in hours experienced by current tow

Model Performance

The simulation appears to be behaving as designed, but contains many over-simplifications. Timing tests reveal that a 50 year simulation takes 50 seconds when the inter-arrival time for a tow is 4.3 hours. When the inter-arrival time is 8.0 hours, the simulation takes 27 seconds, on an IBM-compatible 486/33 Mhz computer. Obviously, a more complex

simulation would take more time. For Monte Carlo approaches, multiple iterations of the simulation would need to be run. Questions as to the number of iterations, the need for a 50 year run, and the variation in simulation performance based on inter-arrival time parameters, would need to be examined to determine the overall length of time needed to test alternatives using the event-based approach in a Monte Carlo simulation.

DISCUSSION

To the design team, the simplified navigation model demonstrated the feasibility and desirability of the event-based, object-oriented approach. Handling each arrival and lockage avoids many discretization and lumping problems, and allows for a significantly more physically-based model. While it would be possible to start building a more sophisticated navigation model immediately, and adjust it in a succession of prototypes, it is desirable, from a programming point of view, to be aware of most of the desired modeling behavior at the outset, even if not all desired behavior is implemented in the initial prototype. An initial prototype can be developed, once questions about the simulation context and complexity of the lock object for the prototype are answered. In particular:

- What is the desired duration of the simulation? Is 50 years per iteration appropriate?
- To what degree should lock behavior be modelled?
- What lock components and failure modes should be examined?
- What vessel types should be handled?
- How are recreation vessels handled? Do they receive special priority, and if so, at what times?
- Is two-way traffic handled?
- Is diurnal variation an issue?
- Does the emergency/auxiliary lock situation need to be modelled?
- How should tow diversion be handled?
- What are the appropriate metrics for the simulation? Does an economic opportunity cost need to be determined, or is average stall duration sufficient?

- How does lock physical status relate to lock service times? How should this be modeled, and how should degradation of lock status be modeled? How do rehabilitation investments get factored in?

Each of the questions require further examination by the design team. A navigation expert should also be consulted as the development of the navigation model progresses.

CHAPTER VII. RECOMMENDATIONS AND NEXT STEPS

SUMMARY OF RESULTS

This project resulted in the refinement of the hydropower simulation to handle more realistic and complex problem domains. Additionally, the hydropower interface was replaced with a Windows-based front-end.

It was found, through a literature review and research, that the Phase I model developed for hydropower could not be applied or made 'generic' for application to another functional area (e.g., navigation). A 'one-size-fits-all' Monte-Carlo simulation model would prove to be too complex an undertaking, given the unique attributes of each functional area problem.

The navigation model was conceptualized, refined, and a small 'mockup' model, short of a prototype, was developed to prove the refined navigation model concepts, in particular the ability to use object concepts in an event-based simulation.

HYDROPOWER MODEL

The hydropower model has been refined to handle advance rehabilitation, opportunity costs, critical sub-features, and a number of other desired capabilities. The database tables were restructured to house new data requirements. The database tables better represent a true relational model. The design team feels that additional refinements should be made to the existing interface and graphical builder (e.g., addition of a help system). However, the model should be applied to a real rehabilitation scenario (using the design team as a support mechanism) to ensure that the hydropower model is:

(1) behaving as designed

(2) properly simulating what is required of a rehabilitation proposal.

Given this, a third phase of work should commence and should consider interface and model refinements and enhancements. The third phase (Phase III) of work should result in a fully developed and production-ready software product with full documentation.

NAVIGATION MODEL

The design team feels that the navigation simulation model can be further developed and can be of utility in the development of navigation rehabilitation proposals. Additional features are required of the model to take it to the prototype level (see Chapter IV), worthy of demonstration and discussion external to the design team. A second phase of development is recommended and should consider the inclusion of a navigation expert. The second phase (Phase II) should result in a navigation simulation that can be applied to a rehabilitation problem by the design team. Phase II should consider the evolution of database tables and a first-cut Windows interface for data access and simulation runs.

APPENDIX A

TECHNICAL LITERATURE REVIEWS

APPENDIX A: TECHNICAL LITERATURE REVIEWS

AUTHORS: Ford, Andrew

TITLE: Estimating the Impact of Efficiency Standards on the Uncertainty of the Northwest Electric System

CITATION: Operations Research, Vol. 18, No. 4, July-August, 1990

NOTES: Used a Monte Carlo type simulation to study risk associated with demands and price of electricity in the Northwest. They used a program called HYPERSENS which employs the Latin Hypercube sampling technique which results in a tenfold decrease in required number of iterations. Program randomly samples values from distributions and then acts as a post processor to analyze/display results of spreadsheet simulation.

AUTHORS: Mays, L.W. (Editor)

TITLE: Reliability Analysis of Water Distribution Systems

CITATION: Task Committee on Risk and Reliability Analysis of Water Distribution Systems, HY. Div., ASCE

NOTES: Chapter 13 (Lansey, Mays, Woodburn, Wunderlich) is on Methods to Analyze Replacement - Rehabilitation of Water Distribution System Components. It is analogous in many ways to the hydropower problem. They describe various optimization and simulation techniques. Simulation method represents the problem as a Markov process with uncertainty.

AUTHORS: Wunderlich, W.O. and Giles, J.E.

TITLE: Probabilistic Analysis of Modernization Options

CITATION: ASCE, Waterpower '91, pp 19-28

NOTES: Addresses the issue of incorporating probabilistic factors in benefit-cost analysis of replacement-repair of hydropower components. Describes several relevant factors that should be incorporated and presents a simple example. References several potentially useful references.

AUTHORS: Giles, J.E., March, P.A., Wunderlich, W.O.

TITLE: Probabilistic Scheduling of Cavitation Repairs

CITATION: ASCE WATERPOWER '91, pp 1904-1913

NOTES: Examines the issue of when to replace/repair hydro units. Treats the problem as a dynamic programming/Markov process. They assume that units can operate at 4 levels of capability from fully operational down to severely degraded.

AUTHORS: Yoe, Charles

TITLE: Quantitative Risk Assessment and Technology Transfer: Software Developments

CITATION: Proc. of the Fifth Conf. on Risk-Based Decision Making in Water Resources, ASCE, Nov. 1991, pp 92-107

NOTES: Paper on incorporating risk in flood damage estimates using the @RISK software. Suggests using triangular frequency distributions in the absence of actual knowledge of probability distributions.

AUTHORS: Smith, V.J., Charbeneau, R.J.

TITLE: Probabilistic Soil Contamination Exposure Assessment Procedures

CITATION: ASCE, J.EE, Vol. 116, No. 6, Nov/Dec 1990, pp 1143-1163

NOTES: This paper compares the use of Monte Carlo simulation and first-order uncertainty analysis. Limitations of Monte Carlo method is the large number of iterations required. First order analysis allows you to estimate the mean and variance of the output by linearizing the first two terms of the Taylor series around the mean.

AUTHORS: Pate-Cornell, M.Elisabeth

TITLE: Costs and Benefits of Seismic Rehabilitation

CITATION: Ann. N.Y. ACAD. SCI., Vol 558, June 1989, pp 392-404 with discussion

NOTES: Addresses a similar problem to our hydro situation in the area of earthquake analysis. Uses an analytical solution as opposed to Monte Carlo simulation. Discusses the appropriate discount rates to use in risk analysis.

AUTHORS: Haness, A.J., Roberts, L.A., Warwick, J.J., Cale, W.G.

TITLE: Testing the Utility of First Order Uncertainty Analysis

CITATION: Ecological Modeling, Vol 58, Nov. 1991, pp 1-23

NOTES: Discusses Monte Carlo techniques and an alternative first order analysis for uncertainty analysis. First order analysis significantly reduces the computational burden and may provide some additional information.

AUTHORS: Douglas, John

TITLE: Probabilistic Risk Assessment - Prescription for Severe-Accident Prevention

CITATION: EPRI Journal, Vol 16, No. 1, Jan-Feb 1991, pp 16-23

NOTES: General discussion of the use of probabilistic risk assessment in evaluating potential for serious nuclear accidents. This is a non-technical overview paper. Mentions EPRI's CAFTA computer program which performs fault-tree analysis.

AUTHORS: Nowik, Shmuel

TITLE: Identifiability Problems in Coherent Systems

CITATION: J. Appl. Prob., Vol 28, No 4, Dec 1990, pp 862-872

NOTES: Somewhat relevant to our problem but very theoretical. Applies to systems which fail as a consequence of the failure of some (rather than one) of its components. Math is very complex.

AUTHORS: Boehm, Barry W.

TITLE: Software Risk Management: Principles and Practices

CITATION: IEEE Software, Vol 8, No 1, Jan 1991, pp 32-41

NOTES: Discusses decision trees as a way of assessing risk. Presents some interesting ways of graphically displaying risk impacts. Somewhat simplistic for our study but may be peripherally useful.

AUTHORS: Anandalingam, G.

TITLE: Hierarchical Risk-Based Methodology for the Analysis of Nuclear Repository Preclosure

CITATION: Fourth Conf. on Risk-Based Decision Making in Water Resources, ASCE, 1989

NOTES: Applies fault-tree/event-tree analysis to preclosure of nuclear repositories. Methods for incorporating stochasticity, & uncertainty due to differing expert opinions and estimates are discussed. If there are 20 parameters, they estimate the need for 10^60 iterations. Latin hypercube method would require only 1000 samples. See reference by McKay (Technometrics, 1979,21:239-245) on latin hypercube.

AUTHORS: Li, Duan and Haimes, Y

TITLE: Optimal Maintenance-Related Decision Making for Deteriorating Water Distribution Systems

CITATION: Water Resources Research, Vol 28, No. 4, April 1992, Part 1 pp 1053-1061, Part 2 pp 1063-1070

NOTES: These papers focus on the development of a semi-Markovian decision model designed to help the decision maker make the best replace/repair decision for a water main pipe at the various stages of it deterioration. A semi-Markovian process is a stochastic process that moves from one state to another with a given probability with the time in a given state represented as a random variable dependent on the current and next state. Different states reflect different pipe conditions. If hydro components were assumed to be in different states of condition, some of the concepts in these papers could be useful.

AUTHORS: McKay, M.D., Beckman, R.J., Conover. W.J.

TITLE: A Comparison of Three Methods for Selecting Values of Input Variables in the Analysis of Output from a Computer Code

CITATION: Technometrics, Vol 21, No. 2, May 1979, pp 239-245

NOTES: This paper compares the use of random sampling, stratified sampling and latin hypercube sampling techniques. Latin hypercube is shown to be a better estimator of the standard deviation of the underlying distribution.

AUTHORS: North, Ronald

TITLE: Risk Analyses Applicable to Water Resources Program and Project Planning and Evaluation

CITATION: Risk/Benefit Analysis in Water Resources Planning and Management, Engineering Foundation Conf., Plenum Press, NY, 1981

NOTES: This is a general paper on the use of simulation in risk analysis in water resources. It discusses alternative probability distribution functions (normal, weibull, etc.) and the pros and cons of use of Monte Carlo type simulation.

AUTHORS: Goicoechea, A., Carr, J., Sharp, F., Antle, G.

TITLE: A Methodology for Risk-Benefit Analysis of Lock-and-Dam Rehabilitation in the U.S. Corps of Engineers

CITATION: Conference on Risk Based Decision Making in Water Resources, ASCE, Santa Barbara, 1985

NOTES: Describes the incorporation of risk in repair/rehabilitation in a civil works project (lock and dams). Provides good examples of how to apply such a technique and to estimate parameters. Paper illustrates the applicability of this type of technique in a broad range of projects. Mentions the possibility of cases where the probability of failure actually can decrease with time (e.g. concrete under certain conditions).

AUTHORS: EPRI

TITLE: Hydropower Plant Modernization Guide

CITATION: EPRINET abstract, available from EPRI as 3-volume set. Publication number GS-6419

NOTES: Provides methods for evaluating plant condition and information on alternative modernization scenarios.

AUTHORS: EPRI

TITLE: RISKMIN: An Approach to Risk Evaluation in Electric Resource Planning

CITATION: Publication number EL-5851 and associated computer code RISKMIN available as EPRI BAP Product No. 5711

NOTES: Provides methods of assessing economic risks associated with resource and maintenance options and to integrate them into resource planning tools. The uncertainties related to load growth, fuel prices, cost of new generation technologies, unit retirement and delays, joint ownership of units, acceptable level of system reliability, and cost of capital and environmental regulations are addressed.

AUTHORS: Tulsiani, V., Haimes,Y.Y., and Li,D.

TITLE: Distribution Analyzer and Risk Evaluator (DARE) Using Fault Trees

CITATION: Risk Analysis, Vol. 10, No. 4, 1990, pp 521-538

NOTES: Describes a computer program (DARE) which incorporates c\fault trees into a decision support system. A case study for NASA's solid rocket booster is presented. Monte Carlo simulation is used to generate distributions for the failure probability of components.

AUTHORS: Merrill, H.M., and Wood, A.J.

TITLE: Risk and Uncertainty in Power System Planning

CITATION: International Journal of Electrical Power & Energy Systems, Vol 13, No. 2, April 1991, pp 81-90

NOTES: Uses the trade-off method with representation of risk incorporated. Views the process as 5-steps: 1) formulate the planning problem; 2) perform tradeoff analyses; 3) determine the robustness of plans; 4) measure exposures; 5) develop hedges. Methods for carrying out these steps are presented.

AUTHORS: Moser, D.A. and Stakhiv, E.Z.

TITLE: Risk-Cost Principles for Dam Safety Analysis

CITATION: Proc. National Conf. on Hydraulic Engineering, ASCE, 1989, New Orleans

NOTES: This paper presents the principles and issues of risk-cost analysis as they have been applied in the evaluation of dam safety improvements. Three different evaluation perspectives were investigated: 1) reservoir simulation and sensitivity of risk-costs to return period for PMF; 2) Monte Carlo simulation with a complete risk model of dam failure; and 3) multi-objective decision problem of minimizing economic risk-costs and human costs.

AUTHORS: Reed, D.A., and Chen, W.

TITLE: An Object-Oriented Programming Approach to Safety Assessment

CITATION: Engineering Structures, Vol 13, October 1991, IPC Science and Technology Press, Sussex, England

NOTES: Past reliability programs have been written in FORTRAN and some have used expert systems. An alternative integrated approach using object oriented programming (OOP) is described. The example presented uses Symbolics Common Lisp language and illustrates its use with an application to safety assessment.

AUTHORS: Hamburger, D.

TITLE: The Project Manager: Risk Taker and Contingency Planner

CITATION: Project Management, Vol. XXI, No. 2, June 1990

NOTES: Interesting paper because it focuses on the role of the project manager in incorporating risk. Emphasizes the needs for contingency planning.

AUTHORS: Haimes, Y.Y

TITLE: Total Risk Management

CITATION: Risk Analysis, Vol. 11, No. 2, 1991

NOTES: In this editorial, the author emphasizes the need for total risk management (TRM) including the four potential sources of failure: hardware, software, organizational, and human. TRM is systemic (?), statistically based and holistic process that builds on formal risk assessment and management, and addresses the four sources of failure within a hierarchical-multiobjective framework.

AUTHORS: U.S. Committee on Large Dams

TITLE: Bibliography on Dam Safety Practices

CITATION: Association of State Dam Safety Officials, Lexington, KY, March 1989

NOTES: This general bibliography contains a section on Risk Analysis. 13 citations are presented in this area which may peripherally relate to our project.

AUTHORS: Heino, P., Poucet, A., and Suokas, J.

TITLE: Computer Tools for Hazard Identification, Modelling and Analysis

CITATION: Journal of Hazardous Materials, Vol 29, 1192, pp 445-463.

NOTES: Presents a review of software tools developed for the documentation and calculation tasks of safety and reliability analysis. An example of an advanced software environment, STARS, for carrying out multi-level knowledge-based safety and reliability analysis is presented.

AUTHORS: Hutton, D., Ponton, J.W., and Waters, A.

TITLE: AI Applications in Process Design, Operation and Safety

CITATION: The Knowledge Engineering Review, Vol. 5, No. 2, 1990, pp. 69-95

NOTES: Overview of the present state of the art in applying AI techniques to the work of chemical and process engineers. Sections on 'loss prevention' including use of fault trees peripherally relate to our project.

AUTHORS: Page, B.

TITLE: An Analysis of Environmental Expert System Applications

CITATION: Environmental Software, Vol. 5, No. 4, Dec. 1990 pp 177-198

NOTES: This study outlines the current state of expert system technology in environmental protection. It defines general characteristics of expert systems and identifies the kind of problems in environmental protection which are well suited for expert system use. Briefly review 21 expert system approaches from Canada and Germany. Little direct applicability to our project but an interesting paper.

AUTHORS: Iman, R.L., and Helton, J.C.

TITLE: The Repeatability of Uncertainty and Sensitivity Analyses for Complex Probabilistic Risk Assessments

CITATION: Risk Analysis, Vol. 11, No. 4, 1991, pp 591-606

NOTES: Paper presents the results of probabilistic risk assessments (Monte Carlo simulation with Latin Hypercube sampling) for a nuclear power plant. Repeatability and sensitivity analysis are investigated. A high degree of repeatability was found for a very complex system using two independently generated Latin hypercube samples.

AUTHORS: Marncio, R.J., Hakkinen, P.J., Lutkenhoff, S.D., Hertzberg, R.C., and Moskowitz, P.D.

TITLE: Risk Analysis Software and Databases: Review of Riskware '90 Conference and Exhibition

CITATION: Risk Analysis, Vol. 11, No. 3, 1991

NOTES: Review of software with application to the practice of risk assessment and risk management that were featured at the Riskware '90 Conference in Columbus, Ohio. Approximately 50 products, most for the PC, ranging in cost from free to $130,000, are reviewed. Primary emphasis is in the hazardous material/emergency spill arena.

AUTHORS: Eckhoff, D.W., Keaton, J.R.

TITLE: Value Engineering/Risk Analysis Approach to Operation and Maintenance of Hydraulic Structures

CITATION: Hydraulics/Hydrology of Arid Lands, ASCE, NYC, 1990, p 160-164

NOTES: Describes the use of value engineering in conjunction with risk analysis in the identification of hazards and processes that may lead to system failure. A multi-disciplinary 'team approach' is used in the identification process. A case study in which the method was applied to a hydropower aqueduct is described. Statistical risk estimates were made by the team and applied in the analysis.

AUTHORS: Carter, E.F., Clemen, D.M., Woodbury, M.S.

TITLE: Options for Hydro Plant Rehabilitation

CITATION: International Water Power and Dam Construction, IWPCDM, Vol. 43, No. 10, October 1991, p 23-26.

NOTES: Many existing hydro plants have been in operation for over 70 years and rehabilitation may extend the plant life at existing capacity, may expand capacity through upgrading units, or both. A rehabilitation study, involving either single plants with multiple units, or a system of several plants varying in size, may be conducted to determine the priority of rehabilitation needs in relation to capacity and energy production. A comprehensive plan and schedule should be developed to coordinate all aspects of rehabilitation.

AUTHORS: Lagassa, George

TITLE: Changing Hydro Strategies

CITATION: Independent Energy, Vol. 21, No. 6, Jul-Aug 1991, p 54-

NOTES: The hydro power industry in the U.S. is expected to have gradual growth in the near term. Most companies are repositioning for the next phase of market expansion and looking at options including relicensing, refurbishing, and facility upgrading. Site rehabilitation and upgrade work are expected to make up an increasingly larger share of hydro work in the next decade.

AUTHORS: Froehlich, D.R., Veatch, J.A.

TITLE: Focusing Attention on Turbine Rehabilitation

CITATION: Hydro Review, Vol. 10, No. 1, Feb 1991, p 12-

NOTES: Owners of older hydro plants are increasingly turning to turbine rehabilitation as a cost effective option to increase plant value while extending plant life. As many as 800 turbines may have been rehabilitated via turbine runner replacements in the U.S. in the 1980's. A 5-step method for such replacements is described.

AUTHORS: Pritchett, E.C.

TITLE: The U.S. Army Corps of Engineers' REMR Program

CITATION: Hydro Review, Vol. 9, No. 1, Feb. 1990, p 44-

NOTES: Increasing requirements for operations and maintenance at civil works projects, combined with an aging inventory of facilities, led USACE to establish the Repair, Evaluation, Maintenance & Rehabilitation Program (REMR) in 1984. The program has fostered significant research in this area.

AUTHORS: Flower, J.M., Mieleniewski, J.A., Wade, J.A., Longman, A.D., Bennet, G.D., Hatfield, W.E.

TITLE: Planning of Plant Refurbishment

CITATION: Inst. Elect. Eng., Refurbishment of Power Station Electrical Plant International Conf., London, Nov. 1988, p 9-

NOTES: This paper describes four different types of power plant refurbishment plans including 3 hydro plants and 1 thermal plant. Hydrologic and economic analyses led to the decision to refurbish the plants.

AUTHORS: Pfafflin, G.E.

TITLE: Options in the Modernization of Francis Turbines

CITATION: Illinois Inst. Technology 48th American Power Conf., Chicago, April 1986, p 1124-

NOTES: There are a number of options that should be considered in the study of rehabilitation and modernization of Francis turbine plants. Most hydro units that have not been upgraded during the past 30 years offer substantial opportunities for increased energy production and reduced operating and maintenance costs with payback periods ranging from 1 to 5 years.To determine optimum levels of project modernization and rehabilitation, each site must be individually examined.

AUTHORS: Ernst, L.R.

TITLE: Case·Studies in Hydroelectric Turbine Rehabilitation

CITATION: TVA/ET AL Waterpower 83 Hydropower Intl Conf, Knoxville, TN, Sept 1983, Vol.2 , p 986-

NOTES: Energy output and performance of existing hydro complexes is improved through equipment rehabilitation. Turbine upgrading, component repairs and retrofits, and runner replacements reduced detrimental operating characteristics and equipment downtime at several sites described in this paper.

AUTHORS: Wall, R.L.

TITLE: Increasing the Capabilities of Hydroelectric Systems

CITATION: TVA/ET AL Waterpower 83 Hydropower Intl Conf, Knoxville, TN, Sept 1983, Vol.2 , p 967-

NOTES: Hydro capacity can be increased by installing generator equipment at existing dams, developing new dams and restoring old sites. Updating existing facilities entails increasing capacity above original design values, or restoring capacity to its original level after system deterioration. The equipment changes and considerations needed to accomplish either of these objectives are addressed in this paper. The rehabilitation of generators, turbines, exciters, and other hydro components are surveyed.

AUTHORS: Raffel, D.N.

TITLE: Improving Operation of Existing Hydroelectric Plants via Field Testing Performance

CITATION: Illinois Inst. Technology American Power Conf., Chicago, April 1987, p 1020-

NOTES: Performance of hydro units usually deteriorate after several years of operation. Plants can be refurbished and improvements realized to bring the plant back to its original operating and condition. Hydropower output can usually be increased at a cost justifying the effort. Information needed to make appropriate an effective modification decisions are summarized.

APPENDIX B

REHABILITATION PROPOSAL REVIEWS

APPENDIX B: REHABILITATION PROPOSAL REVIEWS

BULL SHOALS POWERPLANT UPRATE STUDY - JULY 1991

Overview

The Bull Shoals project is located in the Ozark Mountains of north-central Arkansas and southern Missouri. Its reservoir extends 75 along the White River. The project is authorized primarily for the purposes of flood control and hydropower generation.

The powerhouse has eight vertical shaft Francis turbines. Commercial generation (units 1-4) was begun in 1952. Installation of units 5-8 was completed in 1963. Between 1978 and 1983, all eight generator stators were rewound with higher capacity windings. The existing turbines cannot provide the additional power to the generators to utilize the higher rewound capacities.

The units are inspected for cavitation every two years, with repairs made every ten years. Units 1-4 also require crack repairs to the cast steel runner buckets approximately once every ten years. In 1984, the turbine runner was refurbished and seals were replaced on unit 8.

The purpose of this study is to determine the feasibility of uprating the existing generating units in order to increase the generation capacity of the Bull Shoals powerhouse.

Proposed Work Effort

The proposed rehabilitation is classified as a modernization according to the definition found in EC 11-8-2. The feature to be rehabilitated is not exhibiting reliability problems. The capital outlay will result in increased benefits to users.

The without-project condition assumes the existing plant will continue to operate in its present condition. The plant would continue to produce a dependable capacity of 350 MW, with the turbines being the limiting factor for power production. This is the base condition for the economic analysis.

Two alternatives for increasing the capacity of the powerhouse were considered (replacement of the turbine runners for units 1-4 and replacement of turbine runners for units 1-8). In addition to power gain, new runners would return turbine efficiencies back to original or better values. Based on estimates by manufacturers, the power output resulting from

replacement of the turbine runners can be expected to increase from 63,500 to 69,000 horsepower at 190 feet of head and 100 percent gate for units 1-4, and from 74,400 to 80,000 horsepower for units 5-8.

An investigation of the generators, including stator windings, field windings, generator shafts, thrust bearings, cooling systems, excitation systems, governors, and transformers was performed. Based on the findings of this investigation, these uprate levels are probably achievable without major generator modifications. The maximum continuous capacities of the new stator windings exceed the existing turbines' maximum capacity or cavitation limits for units 1-4 and units 5-8. This rating does not exceed the maximum turbine capacity for units 1-4 after new runners are installed.

Type of Analysis Used

The economic valuation for uprating the Bull Shoals powerplant runners consists of the costs and benefits associated with uprating the powerplant turbine runners. The period of the analysis is 40 years, which is approximately the same as the composite service life for replacement costs contained in EM 1110-2-1701.

The estimated costs are provided for the baseline (the cost of simply running the existing powerhouse at the existing capacity) and two uprate alternatives (the cost of installing four new turbine runners in units 1-4 and running the powerplant at the maximum existing generator capacity, and the cost of installing eight new turbine runners in units 1-8 and running the powerplant at the maximum existing generator capacity). The cost estimates related to baseline and uprate of units 1-4 were obtained from the July 1989 Reconnaissance Level Report adjusted to October 1990. The cost estimates relating to the uprate of units 1-8 based on data available in-house. Estimates of power loss during rehabilitation are provided for each alternative.

The energy benefits and the effects of the uprate on system operation were estimated using the POWERSYM hourly production cost model.

Applicability of Prototype Simulation Model

It appears that application of the prototype simulation model to the proposed rehabilitation alternatives would provide little additional insight to the evaluation of the alternatives. This is because reliability is not in question here. The uprate is proposed in order to increase capacity and thereby increase power production. Neither of the proposed uprates will significantly affect reliability.

THE DARDANELLE REHABILITATION REPORT - JULY 1991

Overview

The Dardanelle Lock and Dam is part of the McClellan-Kerr Arkansas River Navigation System. This is a multipurpose facility, providing navigation, hydroelectric power, and recreation services. The four generating units in the powerhouse have a capacity of 124,000 kilowatts. Since these units were placed in service (between 1964 and 1965), the plant factor has been in excess of 60 percent. The turbines are of the Kaplan type and are rated at 51,800 horsepower at 48 feet of nominal head.

The Dardanelle units were used for load/frequency control of the power system until July 1990. During this time, the units were subjected to frequent load changes with attendant blade movement resulting in accelerated blade trunnion bushing wear. After problems developed, the load control mode of operation of the units was suspended in July 1990 to extend the life of the bearings long enough to program funds for repairs.

The purpose of this study is to determine the feasibility of repairing or uprating the generating units at the Dardanelle powerhouse. This rehabilitation report presents the results of a reconnaissance study that investigated the need for repairs to the Dardanelle powerhouse turbines and analyzed the possibility of repairing, replacing, or uprating the turbines.

Proposed Work Effort

A significant loss of turbine hub oil in one of the units led to an investigation that determined that the bronze trunnion bearings showed signs of severe wear. This wear was created by the rotation of the turbine blade in the trunnion bushing during normal turbine operation. Since this first leakage problem was discovered in June of 1989 in Unit No. 2, similar oil leaks have occurred in Unit No. 4. It is assumed that Units No. 1 and 3 have similar bushing wear, because all four generating units have been subject to the same operating conditions. In June 1990, a turbine unit similar to those in the Dardanelle plant suffered a catastrophic failure.

Four rehabilitation alternatives were evaluated for the turbines (emergency rehabilitation, scheduled rehabilitation, emergency uprate, and scheduled uprate). The without project, or baseline, condition called for welding turbine blades in a fixed position upon failure. Failure is defined as the condition occurring when bearing wear is such that the blade is no longer operable without contact with the hub or discharge ring. The fixed angle would be set to optimize power level while considering vibration level, surging, and unusual cavitation. This assumes that failure is non-catastrophic. The reduction in output resulting

from the operation of the turbines in the fixed-blade mode is reflected in the economic analysis.

The emergency rehabilitation alternative allows the units to operate until a turbine or generating unit fails. The failed unit would then be operated at a reduced power level until all necessary design and contracting are completed and rehabilitation work is ready to commence. The unit would then be restored to its project authorized capacity and returned to service. This alternative assumes that failure is non-catastrophic. Under this alternative, a unit's operation would be restricted for nine months, and the unit would be out of service for 12 months.

The scheduled rehabilitation alternative provides for scheduled, sequential rehabilitation of units as opposed to emergency rehabilitation. The work that would be performed on the units is the same as in the emergency rehabilitation alternative. The timing would be scheduled so that only one unit would be out of service at any time in order to maintain as much generating capacity as possible.

The emergency uprate alternative would allow the turbines to operate until failure, as in the emergency rehabilitation alternative. Immediately upon unit failure, preparation of plans and specifications would begin for securing a turbine contractor. The turbine contract work would include turbine design, model testing, manufacture of new turbines to state-of-the-art performance standards, removal of old turbines, installation of generator and transformer cooling. As in the emergency rehabilitation alternative, operation of the disabled unit under fixed blade conditions will provide reduced power output until the turbine is replaced (assuming non-catastrophic blade failure). All units will be scheduled for upgrade under a single contract upon the failure of one unit, because it is economically advantageous all turbines under one contract. The first unit to fail will operate at fixed-blade capacity for approximately 36 months until removal from service for rehabilitation. Thereafter the upgrade schedule will be identical to scheduled uprate alternative.

The scheduled uprate alternative is based on scheduled design, manufacture, installation of new uprated turbines, generator rewind, and cooling upgrade. Only one unit at a time is planned to be out of service. The generator rewind will be required to match the capacity of the generators to the increased capacity of the turbines after rehabilitation. The out-of-service time for each unit will be 4.5 months. Power capacity will be increased 4 megawatts per unit.

Type of Analysis Used

The economic analysis employed in this report consists of determination of the least cost alternative to maintain the project outputs, and the incremental costs and benefits associated with uprating the powerplant according to the National Economic Development (NED) criteria. The period of analysis 35 years, the expected life of the powerplant equipment. Future replacement costs are assumed to be zero. The federal interest rate was

used to discount all cash flows.

Cost estimates for the without project, or baseline, condition and each of the four alternatives are presented. One point that appears vague is the timing of cash flows for the without project condition, and the emergency rehabilitation alternative. In particular, when the turbine failures are expected to occur is unclear. A table presenting repair costs for the emergency uprate alternative, p. H-3, indicates that the first turbine failure expected to occur in FY 1995.

Risk and uncertainty are discussed with respect to the failure of the Dardanelle turbines. But the statement is made that, "No conclusive data is (sic) available on the rate of bushing wear that would allow calculation of when complete failure might occur. ... Blade seizure will probably occur within two to three years." This risk is not reflected in the economic analysis.

Applicability of Prototype Simulation Model

The problem caused by the potential failure of the turbines at the Dardanelle powerplant would provide an interesting application for the simulation model. Given adequate data concerning failure of these turbines, there is potential for improving on the analysis presented in this rehabilitation study. It should be noted that this will affect the expected cash flows for all alternatives, because estimated cash flows for the baseline condition are based on the timing of the first turbine failure.

In addition to better quantifying the risk related to the first failure of a turbine, risk related to the possibility that other turbines could fail during the period the first turbine is being rehabilitated.

But given the statement that was quoted above, concerning the lack of conclusive data for predicting failure, it appears that the data contained in this report are not adequate for application of the prototype simulation model.

BONNEVILLE REHABILITATION REPORT - MARCH 1992

Overview

Bonneville Lock and Dam is located on the Columbia River about 42 miles east of Portland, Oregon. The First Powerhouse, Navigation Lock, southern half of the spillway are located on the Oregon side of the river. The Second Powerhouse and northern half of the spillway are on the Washington side.

The rehabilitation report was prepared by the Portland District and North Pacific Division Hydroelectric Design Center and is dated March 1992.

Proposed Work Effort

This report presents justification for major rehabilitation of the Bonneville First Powerhouse. The purpose of the proposed rehabilitation is to correct reliability problems in the generating units. The generating units have been in use for over fifty years and are showing a pattern of major component failures that indicate declining reliability. Since 1984, there have been three major unpredictable turbine breakdowns and a significant increase in the frequency of generator coil failures.

Turbine efficiency in the First Powerhouse is also reduced. This reduces the amount of energy that is produced and results in increased mortality of juvenile fish passing through the turbines.

Four alternatives were evaluated:

- Base condition - Continue maintenance and make repairs as required by breakdowns.
- Enhanced maintenance - No rehabilitation, but perform additional maintenance to reduce outages compared to the base condition.
- Stock spare generator windings to reduce downtime when breakdowns require replacement.
- Incremental rehabilitation of combinations of up to ten turbines and generators.

Several different implementation schedules were evaluated to identify the optimum timing for implementing the program.

Type of Analysis Used

The economic analysis employed in this report was based on National Economic Development (NED) criteria. Risk and uncertainty procedures are used to assess the probability of unsatisfactory performance and to quantify the economic consequences. The rehabilitation alternatives were evaluated over a 35-year period from 1992 to 2033. Non-routine operation and maintenance costs, emergency repair costs, total system energy production costs, restoration of degraded efficiency, and economies of scale were included in the analysis. The analysis also included a range of benefits to endangered species through improved downstream survival rates.

An engineering reliability analysis based on historical data for similar equipment was used to develop the probability distributions for component breakdowns used in the economic analysis. A measure of equipment condition (Condition Factor) was assigned to each major component based on recent testing and inspections. The condition factors were then used to modify the breakdown probabilities.

An analysis of the Pacific Northwest power system was conducted using the HYSSR model (Hydro System Seasonal Regulation), the HALLO model (Hydro Allocation), and the PC-SAM model (Personal Computer System Analysis Model). HYSSR simulates power generating and non-power characteristics of the Columbia River Basin system of water control projects for given power loads and varying flow conditions. The HALLO model is used to allocate project discharge to a power plant with multiple and/or different sized generating units. System power studies utilize the PC-SAM model.

A Monte Carlo simulation employing Microsoft Excel and @Risk was used simulate operation of the powerhouse over the planning horizon. The expected values and variances of the results are calculated. Components of each generating unit are modeled individually over the planning horizon. Each component was assigned a reliability factor, the probability of unsatisfactory performance, expressed as a percentage based on the engineering reliability analysis. A separate simulation was conducted for the 'without' project condition and each of the alternatives were considered. Each simulation included 500 to 5000 iterations on each probability for each year in the analysis. For each outage event, the economic consequences are defined in terms of incremental repair or replacement costs and/or duration of outage.

Applicability of Prototype Simulation Model

It appears that the analysis described in the Bonneville report can be adequately modelled by the hydropower prototype simulation model.

The engineering and reliability analysis applied in the Bonneville report is described in Section 6, pp. 44-48, and in Appendix B. The data presented appears to be directly applicable

to the prototype simulation model. Estimates of the probability of unsatisfactory performance are developed from a survivor curve by applying a condition index based on observations specific to each component. This method is used to estimate the probability of blade failure for each of the ten units at Bonneville. The probability of turbine retirement, a major malfunction requiring the total disassembly and renewal of the turbine, is based on survivor curves and the age of the turbine. The probability of retirement is shown for each unit on p. 48.

Condition factors and probability of retirement related to stator windings are also presented for each generator, pp. B-17 through B-24. Historical data is used to develop a survivor curve. The slope of the survivor curve is the retirement rate, and indicates the probability that the equipment will perform unsatisfactorily at that age. The retirement rate is then modified according to the condition index of each generator. The winding retirement probability is calculated for each of the ten generators, as found in pp. 48 and B-24.

The estimated costs related to any failure or outage are independent of the simulation method. The simulation time step used in the Bonneville report is one year, the same as that used in the prototype model. The Bonneville report assumes that each of the ten generating units operate independently.

In the Bonneville report, the impacts to system power production are calculated using the PC-SAM, HYSSR, and HALLO models. An additional model, FISHPASS, is utilized along with other information to identify the impacts of alternative measures on juvenile fish passage and survival rate. It is expected that these models will also be used to develop the required feature input data for the prototype simulation model.

WOODRUFF REHABILITATION REPORT - FEBRUARY 1993

Overview

The Jim Woodruff Powerhouse is located on the Apalachicola River and has been producing commercial power since 1957. The total rated capacity is 30 megawatts, provided by three 10-megawatt units. The Jim Woodruff Lock and Dam is a multipurpose project. In addition power production, the navigation lock services water transportation, and the area immediately downstream of the dam serves as a spawning area.

This report was produced by the Mobile District of the Corps of Engineers and reviewed by the South Atlantic Division in Atlanta. The purpose of the report is to evaluate the present performance of the Jim Woodruff powerhouse and present an economically justified rehabilitation program that improves reliability and restores lost efficiencies.

Proposed Work Effort

The powerhouse has been in operation for more than 36 years. Reliability of the plant has declined since the early 1970's. Tailwater levels have dropped, and this has resulted in increased heads and decreased submergence of the turbines. As a result, operating heads at the plant now routinely exceed the design specifications of the turbines. Apparent design flaws have resulted in failure of the operating linkages, necessitating the turbine blades on all three units be welded in a fixed position. The combined effects of these factors have been increased maintenance costs and forced outages, decreased ability to respond to varying head and flow conditions, and reduced turbine efficiencies.

Although the generators have not experienced a major breakdown, experience with similar units indicates that the existing stator windings may be approaching the end of their useful life. The increased head conditions, which have resulted from the drop in tailwater levels, have resulted in the need for higher rated generators to properly match the increased turbine outputs.

During preliminary investigations, several alternatives were not found to be technically feasible. These alternatives include:

- Provide tube type unit(s) in the spillway bay(s) adjacent to the powerhouse to allow continued operation during times of extremely low flow and lowered tailwater

- Renovate the existing Terry turbines to original operational condition

Forty alternatives were evaluated during this report, involving combinations of construction of a tailwater weir to restore tailwater elevations, replacement of generators, rewinding of generators, replacement of turbines, replacement of exciters, and stockpiling of generators and exciters. In addition to the without project base condition, nineteen alternatives were evaluated without a tailrace weir and twenty were examined with a tailrace weir. These alternatives are summarized in Table B-10, pages B-40 and B-41.

The without project (base condition) is the standard against which all other alternatives are measured. Major features will be operated until performance becomes unsatisfactory. The component will then be repaired and returned to service. Repairs will correct the correct the cause of the failure and carry varying effects on the component's reliability and efficiency

Type of Analysis Used

The economic analysis employed in this report is based National Economic Development (NED) criteria. A risk-based benefit-cost analysis was used to determine the economic efficiency of the alternative rehabilitation plans in order to determine the most cost-efficient method of improving overall project reliability. The planning horizon was 35 years, from 1999 to 2034. A Monte Carlo simulation was used to model operation of the powerhouse. The simulation adjusted the average annual outputs for downtime due to unsatisfactory performance and computed expected values for repairs and net availability. An event tree is provided to illustrate alternative future pathways.

The demand function, how many units are required, is driven by the hydrologic and hydraulic function, pages B-5 through B-7 and Appendix H. Determination of energy and capacity values is based on the POWERSYM model, pages B-4 and B-5.

Energy and capacity values were provided by the Corps of Engineers North Pacific Division. These energy benefits were estimated for each alternative using the POWERSYM computer model.

The reliability of the turbine runners and the generator stator windings was estimated using survivor curves. This reliability is expressed as a probability of major failure. Derivation of these curves and the resulting probabilities of unsatisfactory performance are contained in Appendix A.

The Monte Carlo simulation adjusted the average annual outputs for downtime due to unsatisfactory performance and computed expected values for repairs and net availability. A condensed output of one simulation is presented in Table B-8, page B-32.

Applicability of Prototype Simulation Model

It appears that the analysis described in the Woodruff report is similar to the prototype simulation model in the September 1993 report, and that most if not all of the data required by the prototype simulation model is contained in the report.

Simulation data is provided in the body of the report and in Appendix B. The time step used in the Monte Carlo simulation is one year. The project life is 35 years. The simulation runs are discussed on page B-31. The federal discount rate is 8½ percent.

Component input and state data, and subfeature input and state data are contained in the body of the report and Appendix A. The probability of unsatisfactory performance for the turbine runners is contained in Table B-6, pages B-22 through B-24, and on page B-26 for the generators. Feature input data are contained in the body of the report.

HARTWELL REHABILITATION REPORT - MARCH 1993

Overview

The Hartwell project is located on the Savanna River in Georgia and South Carolina. The power plant has been important in providing peaking power for the Southeast since 1962. However, the ability to provide this peaking power has been greatly reduced because of declining plant availability. This declining availability along with declining reliability, reduced capacity, and lost efficiency result from the cumulative effects of age, operational cycles, and operational procedures.

These problems have intensified over the past four years in part due to the generators being operated over their rated capacity. There have been a number of coil failures, including three failures since November 1989. Engineering tests also show that the performance of the turbines has degraded and there are cracks in turbine runner blades. These cracks are signs of metal fatigue that could lead to blade failure.

The peripheral equipment that supports the generating units (circuit breakers, transformers, disconnect switches, and isolated phase bus) has degraded over the past 31 years. This has resulted in yearly increases maintenance and forced outage rates over the last eight years. Operation and maintenance data indicate that the peripherals are in such poor condition that they could force a significant shutdown from one month to one year at any time. Peripheral outages are half of the forced outages at the project. Details are provided in Appendix E.

Tests performed on the turbines indicate that efficiency of the units has decreased 3.7 percent over the 31 years of operation. This is detailed on pp. 14-15. Cracks have been found in the turbine runner base material, which indicate metal fatigue. These findings are detailed in Appendix G and Appendix H.

Proposed Work Effort

The purpose of this economic analysis was to determine the most economically efficient strategy for rehabilitation of the Hartwell hydropower units. Costs associated with five alternatives for restoring the reliability of the Hartwell Powerhouse by returning the units to their original availability and efficiency were compared against the base condition under which no major rehabilitation was undertaken.

The following is a summary of the six alternatives:

- Base condition, no action

- Rewind for maximum generator rating
- Rewind for maximum generator rating with replacement of peripheral equipment
- Rewind for maximum generator rating with turbine refurbishment and replacement of peripheral equipment
- Rewind for maximum generator rating with replacement of turbine and peripheral equipment
- Rewind for maximum generator rating with turbine refurbishment

The base condition (without project) is the standard that the other five alternatives are compared. The major components of a unit will continue to be operated until performance is unsatisfactory. Components will be repaired and returned to service. Repairs will correct the cause of the failure and carry varying effects on the components reliability or efficiency. As equipment continues in service, outages become more frequent and plant availability declines.

Enhanced maintenance was considered but not included as an alternative, because the generator and stator windings are so brittle the best maintenance policy is to not maintain the coils. As a result, there are no benefits to be gained by enhanced maintenance spending.

Stocking spare parts was also considered, but rejected because of problems with contracting, warranties, and storage. In addition, previous studies have concluded that stocking spare parts is not cost-effective.

Rewind for maximum generator rating with turbine refurbishment and replacement of peripheral equipment is the recommended NED plan. Rewind for maximum generator rating with replacement of turbine and peripheral equipment was economically justified over the recommended alternative, but replacement of turbine and peripheral equipment results in a significant efficiency improvement, which would need a cost sharing sponsor.

Type of Analysis Used

A risk-based benefit-cost analysis over the 35-year planning horizon was used to determine the most cost-efficient method of improving overall project reliability. A spreadsheet model developed by IWR was used to simulate the operation of the plant over the 35-year planning horizon. Five thousand iterations were completed for each alternative over the planning horizon. The model allows for two modes of unsatisfactory performance (MUP) and uses random number generation to determine the timing of service interruption. Details of the economic analysis method, data, and results are contained in Appendix D.

Energy and capacity values were provided by the Corps of Engineers North Pacific Division. These energy benefits were estimated for each alternative using the POWERSYM computer model.

Initial retirement rates for each generator were estimated by the Mobile District Hydropower Engineering Section and are shown in Table D-3. Derivation of these rates is included in Appendix B, *Engineering Reliability Analysis*. For the turbines, the initial retirement rate was 0.51 percent, and the degradation rate was 0.017 percent. This is based on review of turbine retirement data from Corps of Engineers and Bureau of Reclamation projects by the North Pacific Division. Data inputs specific to each alternative are detailed on pages D-12 to D-25.

Applicability of Prototype Simulation Model

The analysis described in the Hartwell report was used as a test bed in development of the prototype simulation model.

Simulation data required by the prototype model is contained in the body of the report. Component data and component state data are contained in Appendices B and D. Subfeature input data, subfeature state data, feature input data, and feature state data are contained in the body of the report and Appendix D.

Retirement rates and repair costs used in the simulation model are shown on p. D-6. Event trees in Attachment D-1 of Appendix D show the structure of the simulation model and allow direct comparison to the prototype simulation model.

MISSISSIPPI RIVER, LOCKS AND DAMS 2-10 REHABILITATION EVALUATION REPORT - SEPTEMBER 1988

Overview

The projects proposed for rehabilitation in this report include Lock and Dam 2, Lock and Dam 3, Lock and Dam 4, Lock and Dam 5, Lock and Dam 5A, Lock and Dam 6, Lock and Dam 7, Lock and Dam 8, Lock and Dam 9, Lock and Dam 10. These projects range from Lock and Dam 2 about 1.4 miles upstream from Hastings, Minnesota to Lock and Dam 10 about 16 miles below the mouth of the Wisconsin River and 36 miles above Dubuque, Iowa.

Separate evaluation reports are made for crane carriers and bulkhead hoists; lock machinery for Locks 6, 7, 8, and 9; and stage 2 Lock and Dam 5.

With respect to crane carriers and bulkhead hoists, the Lock and Dam 20 service bridge crane accident in August 1986 prompted the St. Paul District to evaluate the safe, effective performance of the existing fleet prior to procurement of a new service bridge crane scheduled for Lock and Dam 2 to replace an existing unit. Preliminary findings indicate that there is concern over the structural stability, instrumentation, and electrical wiring of this equipment. Safety issues caused by these problems affect operators and maintenance personnel.

The review of lock machinery is based on the age and condition of the present equipment. The existing machinery at Locks 6, 7, 8, and 9 was installed in the 1930s. Testing has revealed extensive wear that threatens the reliability of the machinery.

The review of stage 2 Lock and Dam 5 was prompted by the existing site development at Lock and Dam 5. This is the result of numerous requirements, some of which are no longer valid. Existing spatial arrangements and site organization do not maximize operational efficiency.

Proposed Work Effort

Crane Carriers and Bulkhead Hoists

The St. Paul District recognizes the importance of a systematic approach to the Mississippi River system and recommends to first proceed with a more technically comprehensive Design Analysis Report to define the existing service bridge crane stability. Contract documents are recommended to follow for Locks and Dams 2, 4, and 5. Contract

documents are recommended to follow for three lower carriages with auxiliary bulkhead hoists for the new Lock and Dam 2 service bridge crane and to replace the 1930 electric hoistcars at Locks and Dams 2, 4, and 5. A rehabilitation program for the remaining seven locks and dams will follow to ensure a systematic service bridge system.

The operational requirements for all sites 2-10 are identical except for the length of the bulkheads. The elevated service bridges will not allow land access, but a single, larger capacity, barge-mounted service crane could be designed for all existing tasks of the service bridge crane system. This crane could also be expanded to service the lock chamber, riverbank and spillways.

Lock Machinery for Locks 6, 7, 8, and 9

The operating machinery recommended for rehabilitation includes miter gates and tainter valves. For miter gates the plan calls for an electric motor and enclosed gear drive to be mounted above the top of the lock wall to reduce their vulnerability to high water. The tainter valve machinery consists of a two-speed electric motor, gear reducer, and cable drums mounted above lock wall elevation. Failing to replace the existing machinery will result in decreased reliability, continued susceptibility to high water, increased maintenance, continued reliance on nonstandard machinery.

The frequency of failures will continue increasing if existing machinery is not renovated, Some failures have the potential to adversely affect navigation. The proposed improvements will virtually eliminate the emergency removal of machinery as a result of high water conditions. Disruptions to navigation will be less frequent and severe. New machinery will reduce the amount of preventative and corrective maintenance efforts by Operations. New machinery has been installed at four of the locks within this district and a fifth is under construction. Machinery at these six sites are identical. Until present machinery are replaced at Locks 6, 7, 8, and 9, Operations will need to maintain two different vintages of equipment.

Stage 2 Lock and Dam 5

The recommendation is for the site plan to be updated to integrate present policies, operations activities, existing public use, environmental quality features, and major maintenance features. The plans for each of the following major maintenance projects features are presented separately:

Site Planning and Improvements
Building Systems
Floodproofing
Sanitary Sewer and Water Systems

Concrete Restoration
Auxiliary Water System
Air Bubbler System
Electric Service
Electrical Systems
Standby Power Unit
Lighting Systems
Communications Systems
Gauging System

These plans include a discussion of existing conditions, a description of the recommended plan, and the estimated cost of the improvements.

Specific aspects of the site that could be improved include access and circulation, building layout, fire protection, utilities layout, land use, service and public area relationships, drainage, and landscaping (including functional plantings). These improvements are expected to revitalize the lock facility, enhance functional performance, improve safety, and extend the life of the project through the next fifty years of increasingly heavy use. After the site plan is updated, individual site improvements will be designed.

Type of Analysis Used

A single cost/benefit analysis was used to evaluate the entire major rehabilitation project. The analysis fits on a single page (including footnotes). The benefits and costs have been deflated to October 1984 price levels, as presented in the Reconnaissance Reports for Major Rehabilitation (dated April 1984 for Locks and Dams 3-5, March 1985 for Locks and Dams 5A-9, April 1983 for Locks and Dams 2 and 10). Little information is given concerning how benefits were calculated. Cost estimates are presented for each alternative and where applicable for each lock work feature. Risk is mentioned. For example, uncertainty is mentioned as to the extent of rehabilitation necessary for the existing service bridge cranes located at Locks and Dams 3 and 5A-10. But it is unclear how or if this uncertainty affected the benefit/cost analysis.

Applicability of Prototype Simulation Model

The projects under review here are clearly potential applications for the prototype simulation model. But the evaluation reports do not contain adequate information to perform the analyses. As has been mentioned additional data on costs and benefits are available in other reports. It does not appear, however, that uncertainty or risk have been included in these computations.

So, although these types of projects appear to be an appropriate application of the prototype simulation model, the information available in the evaluation reports does not appear to be sufficient.

DRAFT PROGRAMAMATIC IMPACT STATEMENT MAJOR REHABILITATION EFFORT MISSISSIPPI RIVER LOCKS AND DAMS 2-22 ILLINOIS WATERWAY FROM LAGRANGE TO LOCKPORT LOCKS AND DAMS - SEPTEMBER 1988

Overview

This report is an environmental impact statement (EIS) that assesses the environmental impacts to the Upper Mississippi River System (UMRS) resulting from the major rehabilitation effort at Mississippi River Locks and Dams 2 through 22. This EIS was prepared as a result of concern expressed as to the type and level of environmental impacts resulting from the following actions:

- Submersible Tainter Gate, Peoria and LaGrange Locks and Dams, Illinois Waterway
- Guardwall at Lock and Dam 22, Saverton, Missouri
- Vertical Lift Gate at Lock and Dam 20, Canton, Missouri
- High-Volume Bubbler Systems at Locks and Dams 2 through 22, Mississippi River
- Modification to Lock Chamber Outlet Structure at Lock and Dam 15, Rock Island, Illinois
- Upper Guidewall Extensions, Locks and Dams 12 through 22; Lower Guidewall Extensions at Locks and Dams 21 and 22, Mississippi River

These measures were included in this report because of the potential to increase navigation traffic and possibly cause cumulative impacts to the UMRS.

A traffic analysis was conducted to determine whether operation of the measures would increase commercial navigation on the UMRS. The traffic analysis concluded that during the navigation season, a very small increase in system traffic may occur as a result of the proposed measures. This increase is within the normal variability of any navigation season and would not result in system-wide (cumulative) impacts to the UMRS that are measurable over the existing condition.

Although projected traffic increases are minor, concern has been expressed that traffic increases may be concentrated at the end of the navigation season, due to the installation of high-volume bubbler systems. Industry representatives have indicated that bubbler systems would not induce further traffic, but only assist in the orderly withdrawal of tows. The installation of high-volume bubbler systems would not promote a higher level of end-season traffic.

Proposed Work Effort

The following rehabilitation measures have been identified as having the potential to increase traffic, which may cause cumulative environmental impacts on the UMRS.

Twenty-five wickets of the existing wicket dams at Peoria and LaGrange will be replaced by one 84-foot-wide submersible tainter gate and two 8-foot-wide concrete piers. The tainter gates will be located about 75 feet upstream of the wicket dam and adjacent to the riverward lock wall to assist in the passage of ice and to improve the safety and flow regulation at the dam.

The upper approach to Lock and Dam 22 has a severe outdraft problem, creating the potential for tows and loose barges to be swept away from the lock approach to the dam. This condition has led to eight accidents in the last ten years. The proposed guardwall extends upstream of the river wall of the auxiliary lock to act as a barrier to tows, reduce recurrent damages to the dam's roller and tainter gates, and reduce the outdraft problem.

A vertical lift gate is proposed for the lower end of the auxiliary lock at Lock and Dam 20. Ice and debris collect in the upper approach to the lock, interfering with lock operations and presenting a problem to navigation. This ice and debris must be removed by locking it through the chamber or pushing it out of the approach area using a tow. These operations are a safety hazard to personnel, and the ice and debris cause damage to miter gates and structural members. The proposed vertical lift gate would eliminate these problems.

High-volume bubblers are proposed at Locks and Dams 2 through 22 to prevent ice accumulation on gates and clear gate recesses of ice and debris. Low-volume systems are already in use at many sites on the UMRS and are partially effective in reducing ice problems at the locks. The proposed high-volume systems would reduce the hazard associated with chipping ice from lock gates and walls, and pushing ice and debris away from the gates with long poles. Bubbler systems would also reduce operating stresses on lock gates and machinery.

The existing outlet tunnels from the main lock chamber of Lock and Dam 15 exit at the lower end of the lock. This creates severe outlet turbulence due to the unique geometry of the site. This turbulence creates the potential for barges to break loose from the lower guidewall during double lockages. The proposed modification diverts the discharge into the lower auxiliary lock area during double lockages.

Upper guidewall extensions are proposed at Locks and Dams 2 through 22, and lower guidewall extensions are proposed for Locks and Dams 21 and 22. The upper guidewall extensions would allow tows to maneuver their stern to the guidewall, secure a line to the wall, and safely work the head of the tow to the wall to be properly aligned for entry into the lock chamber. The upstream approaches to the locks, as well as the downstream approaches at Locks and Dams 21 and 22, have periods of strong crosscurrents that cause alignment and

maneuverability problems. These currents have been a factor in a number of accidents in which barges have caused structural damage to these facilities.

Type of Analysis Used

The analysis contained in this report evaluates the environmental effects of the proposed rehabilitation work. The economics related to the proposals are not considered.

Applicability of Prototype Simulation Model

The rehabilitation proposals evaluated in this report could possibly be evaluated using the prototype simulation model. But since no information concerning costs or benefits are presented in the report, this is only a supposition. Since no mention was made concerning reliability, there is also the question of whether or not the prototype simulation model would be more appropriate in this instance than the traditional cost/benefit approach.

MISSISSIPPI RIVER ROCK ISLAND, ILLINOIS LOCK AND DAM NO. 15 MAJOR REHABILITATION REPORT MAY 1991

Background

Lock and Dam No. 15 is a unit of the Inland Waterway Navigation System of the Upper Mississippi River Nine-Foot Channel Navigation project. It is located at river mile 482.9 in the vicinity of Rock Island, Illinois, and controls a pool of 10.4 miles. It was constructed between 1931 and 1934 and placed in operation in March, 1934; the first such structure in the Rock Island District and the only one which uses roller gates exclusively. The facility is composed of:

- A main lock with dimensions of 600' long and 115' wide on the Illinois shore with a maximum lift of 11 feet. The upstream and downstream miter gates are 31.4' high. There are 4-tainter valves to control filling. The landwall is 2468" long which includes an upper guide wall of 676', the main lock wall of 670', and the lower guide wall of 1122 '.

- An auxiliary lock with dimensions of 110' by 360' long with 31.4' high upstream and downstream miter gates. There are 4-tainter valves to control filling. The intermediate wall (separating the two locks) is 1331' and the river wall (between the auxiliary lock and the dam) is 1371.5'.

- A dam of 1277' length composed 11 roller gates and associated piers, sills, aprons, service bridge, operating machinery, emergency bulkheads, and control houses. A small turbine in the powerhouse provides energy to power the lock.

There has been no major rehabilitation of the facility and only routine maintenance and repair of damage caused by towboats and barges has occurred.

The report was prepared by the Rock Island District and addresses alternative and recommended rehabilitation plans.

Proposed Work Effort

The proposed work effort is composed of the following components:

- Lock walls, guidewalls & walking surfaces: dewater locks and perform needed repairs.
- Main lock and auxiliary lock tainter valves: repair and reseal.

- Main lock and auxiliary lock miter gate machinery: removal and replacement.
- Lock tainter valve machinery: removal and replacement.
- Main lock outlet tunnel: rerouting flow to turbulence.
- Lock and dam electrical equipment: removal and replacement.
- Dam piers: sandblasting, repair and painting.
- Roller gates: cleaning and painting.
- Service bridge: Sandblasting, painting, repair and replacement of walkway.
- Emergency bulkheads: Sandblasting, painting, repair and replacement of seals.
- Davenport seawall/storm sewer: repair.
- Power house/generator: renovation.
- Maintenance/storage shed: renovation.
- Lock control stand enclosures: replacement.

Total rehabilitation cost estimate is $23,800,000 for a 2-stage, 4-year (1992-1995) period. Various alternative designs and plans were studied.

Type of Analysis Used

The economic analysis used in this report is based on the National Economic Development (NED) criteria. Basic assumptions in the analysis included:

- Medium growth rate for commodity traffic
- System capacity is added to the Upper Mississippi River as economically justified
- Work requiring lock closure will be done in the winter so traffic is not disrupted
- Economic life of the rehabilitation begins upon completion of the project and ends when an additional chamber is economically justified
- Benefits are discounted at a rate of 8.75% to 1996 and the economic life of the rehabilitation is 1996 to 2004
- The navigation season is 275 days (March - November)

Benefits of rehabilitation accrue from three areas:

- Reduction in routine traffic disruption due to downtime. Delay costs are calculated from the present value of the difference between stall costs with and without rehab for 10 year period using expected values. Stalls attributable to mechanical failure will occur with a probability of 0.0047 per tow lockage with an expected duration of 131 minutes. These values remain constant without rehabilitation. With rehabilitation, the probability is reduced by 30% and duration by 25%. (Based on "A Model of Stalls and

Stall Duration" by H.H. Kelejian, University of Maryland, 1990). Present value of savings in this category associated with rehabilitation are estimated at $ 2.68 million ($1996 $).

- Avoidance of low probability, high impact events such as gate failure. Such events are classified as resulting in navigation haltage for one day or more. A distribution of length of stall and a cost per day for stalls were assumed and the expected present worth was calculated as $ 11.06 million for a 10-year period. No such events were assumed to occur if rehabilitation took place.

- Reduction in future maintenance costs. Future major maintenance costs that would be avoided due to rehabilitation were estimated by calculating the present worth of rehabilitation if it was delayed as long as possible while still maintaining a minimum acceptable condition level based on engineering judgment. Estimated cost was $ 13,191,800.

The total annual benefits and costs were $ 2,392,800 and $ 1,979,700 respectively resulting in a B/C ratio of 1.2.

Applicability of Prototype Simulation Model

The analysis used in the study was essentially a static analysis incorporating only a minimal probabilistic component. However, the basic concepts associated with the prototype simulation model could be used for the Lock and Dam No. 15 situation. In this case, each of the items would correspond to separate sub components. Potential required modifications needed for the prototype (i.e. differences from the hydropower plant applications for which the prototype was initially tested) include:

- the time scales associated with repairs of failures at the lock and dam are generally on the order of hours, days and possibly weeks as opposed to the months and years at power plants;

- the factors affecting usage of the lock and dam are generally treated as a random variable (i.e. vessels arrive at different intervals);

- seasonal variations may exist for both vessel arrival frequencies and for probabilities and consequences associated with losing the pool under certain failure conditions. However, the report does not consider either of these phenomena so that the need for seasonal variation is not certain.

MISSISSIPPI RIVER, LOCKS AND DAMS 11-22 APPROACH IMPROVEMENTS REHABILITATION EVALUATION REPORT - MAY 1991

Overview

This report provides preliminary data concerning proposed improvements to the approach conditions at Mississippi River Locks 11 through 22. These improvements will combine industry, environmental, and Corps related issues concerning approaches to locks, defining tow waiting areas, and reducing damages to lock and dam structures. The approach improvements will be classified as a modernization category as outlined in EC 11-8-2 (FR), dated 31 March 1991.

The *Upper Mississippi River Navigation Study Reconnaissance Report*, June 1991 addresses the problems, needs, and opportunities associated with the capacity increases to the Upper Mississippi River Navigation System and established a federal interest for making structural and nonstructural improvements to the system. This analysis indicates the potential for short-term improvements that would extend the useful life of the existing structures and improve the efficiency of lock operations without changing the lock size.

The proposed improvements include installation of mooring facilities and structural solution to the approach problems. The mooring facilities have been included in this report to allow a better understanding of the overall approach conditions at each lock, but will be installed as part of the Operations and Maintenance Program. The mooring facilities will be land-based and floating. There are generally no mooring sites above or below the lock that allow for efficient exchange of tows and transit of the lock. At many locations, waiting tows must wait several miles away from the lock. These tows have damaged shoreline vegetation and disturbed shoreline habitat.

This rehabilitation report focuses on the structural solutions to the approach problems. The upstream approach to the locks, as well as the downstream approaches at Locks and Dams 21 and 22, have periods of strong crosscurrents that cause alignment and maneuverability problems. These currents have allowed barges to cause structural damage to these facilities.

Proposed Work Effort

A series of structural measures is proposed to address the approach problems. The proposed project includes implementation of extended guidewalls on the upstream side of locks 12, 13, 14, 16, 17, 18, and 20; and on both the upstream and downstream sides of locks 21 and 22. Placement of guide cells on the upstream side of lock 15 is also evaluated.

Upper guidewall extensions at Locks and Dams 12 through 22 and lower guidewall extensions at Locks and Dams 21 and 22 are intended to allow tows to maneuver their stern to the guidewall, secure a line to the wall, and safely work the head of the tow to the wall to be properly aligned for entry into the lock chamber. The upper guidewall extensions will also allow upbound double lockages to recouple on the guidewall allowing quicker turnaround of the lock chamber. The guidewall extensions would consist of a series of sheetpile cells connected by precast concrete segments.

Guardcells at the upper end of the intermediate wall at Locks 11, 12, 16, 17, 18, 20, 21, and 22 are proposed to supplement the protection to the upper miter gates. These cells would be tear-drop shaped and filled with concrete.

A guardwall extending upstream of the river wall of the Lock and Dam 22 auxiliary lock is proposed to act as a barrier to tows and reduce recurrent damages to the dam's roller and tainter gates. This would reduce but not eliminate the outdraft problem.

Mooring facilities will consist of mooring buoys, landbased moorings, or mooring cells adjacent to the lock approaches. This will allow tows to moor without damaging shoreline vegetation or having to idle to maintain position.

The schedule for design will include model testing at Locks 12, 13, 14, 16, 17, 18, 20, 21, and 22. The model testing will optimize the lengths and configuration of the guidewall extensions.

Type of Analysis Used

The analysis contained in the report evaluates the implementation of the extended guidewalls and the placement of guide cells on the upstream side of Lock 15. This is a benefit-cost analysis. Separate benefit/cost ratios are presented for each lock. A sensitivity analysis was done based on the accident rate from 1986 to 1990. The effects on the benefit-cost ratios for Locks and Dams 11 and 19 are presented.

Commodity traffic was assumed to grow at the median growth rate described in the *1988 Inland Waterway Review* from a base year of 1989. Twelve hundred foot lock chambers are assumed to be added when they are incrementally justified. As a consequence of this the "without project" delays are not allowed to grow beyond the annual cost of lock replacement and the economic life of the extended guidewalls ends at the time delay cost for the "with-guidewall" condition exceeds the annual cost of lock replacement. It is assumed that capacity is added as needed, and systemic traffic diversion is negligible.

Benefits of the extended guidewalls that were included in the analysis include delay reduction and investment savings in postponing the need for a new chamber. Benefits that

accrue as a result of improved safety are considered in a separate section (that contains the previously mentioned sensitivity analysis).

Applicability of Prototype Simulation Model

It appears that the cost and benefit data contained in the report would be adequate for the prototype simulation model. But since reliability is not in question, it is doubtful that the prototype simulation model will improve on the results presented in the report. The concept of the probability of unsatisfactory performance might be applicable to the modeling accidents. This may improve on the sensitivity analysis contained in the rehabilitation report.

THE LOWER MITER GATE REPLACEMENTS AT BRANDON ROAD, DRESDEN ISLAND AND MARSEILLES LOCKS AND ROCK WALL RESURFACING AT LOCKPORT LOCK REHABILITATION EVALUATION REPORT - JUNE 1991

Overview

The Illinois Waterway is a vital link in the United States Inland Waterway Navigation System connecting the Great Lakes—St. Lawrence Seaway and the Mississippi River. This waterway is essential to the agricultural, construction, and energy industries of the region. One hundred-thirty-eight terminals on the waterway ship and receive commodities. The importance of the waterway is reflected in the continuing increase in tonnage shipped. The *1988 Inland Waterway Review* projected that the future traffic growth on the Illinois Waterway will range from 1.0 to 2.5 percent annually.

The purpose of this report is to provide an evaluation of the current condition and recommend a rehabilitation plan for the lower miter gates at the Brandon Road, Dresden Island, and Marseilles Locks, and the lock chamber concrete at the Lockport Lock. Replacement of the lower miter gates, their sills and anchorages is evaluated in accordance with Corps of Engineers Engineering Manual 1110-2-2703, Engineering and Design, Lock Gates and Operating Equipment.

The lower miter gates at these locks are almost sixty years old. They are in need of replacement due to deterioration and increasing operational problems. In addition, they no longer meet current Corps of Engineer's design standards. A recurrence of an accident similar to one experienced at the Marseilles Lock in 1988 could result in personal injury to lock personnel, deckhands, or recreational users.

The rehabilitation of the lockwalls at the Lockport Lock is also being evaluated. The lockwalls are in poor condition and are becoming operational and safety hazards. Sections of the existing lockwall have spalled or eroded. Embedded steel is now protruding. The uneven walls and protruding steel create a major operational safety hazard. Tows locking through tend to drag on the uneven lockwall or get caught on the protruding steel. This increases lockage times and causes delays. Continuing deterioration could result in loss of structural integrity of the lockwalls. A sudden, extended failure of this type could have severe economic repercussions.

Proposed Work Effort

Miter Gates

Three alternative plans were considered for the lower miter gates, and their associated sills and anchorages at the three locks (no action, replace in-kind, and lower miter gate replacements).

Under the no action plan, the existing miter gates would continue to be patched, mended, and fixed as problems or failures arise. This will leave the Corps in an ever-increasing, precarious state of reacting to failures and not ensure the uninterrupted function of the waterway.

The replace in-kind alternative calls for replacing the lower miter gates with gates of a similar design to the existing gates. This would involve gates with downstream skin placement. This design is not the most desirable placement of the skin plate, leaves the gate members exposed to continued wetting and drying as lockages occur, and does not address the problem of ice formation on the gate members. This design would not be in accordance with EM 1110-2-2703 standards. If this alternative were chosen, little remedial work would be saved on the sill work and the shut-down time would not be significantly lessened as compared to the lower miter gate replacement alternative. The costs involved for this alternative would be essentially the same as the lower miter gate replacement alternative.

The lower miter gate replacement alternative is the recommended plan. The gates will be similar to the lower miter gates at the Lockport Lock, which have been recently replaced. This design is in accordance with EM 1110-2-2703. The replacement configuration will include a gate which has the skin on the upstream face to alleviate the ice formation problem that currently exists on the exposed, upstream members. To facilitate the replacement, a new sill will need to be constructed and the gate recesses may need to be modified. A new emergency spare miter gate will be fabricated. The work will require that closure of the waterway at each site and dewatering of the lock. The closure time is expected to be 45 days for the first gate replacement at Brandon Road and 30 days for the replacements at Dresden Island and Marseilles the following year.

Lockport Lockwall Resurfacing

Five alternatives were considered for resurfacing the Lockport lockwall (no action, shotcrete, preplaced-aggregate concrete, precast concrete stay-in-place forms, and conventional techniques).

Given the state of the existing lockwalls, the no-action plan was not considered to be a viable option. The recommended fourteen inch thickness of the rockwall resurfacing makes

the use of shotcrete uneconomical as an alternative. The advantages of preplaced-aggregate concrete are that the reduction in drying shrinkage reduces the probability of cracking and it is superior to conventional concrete in resistance to freeze-thaw damage and impermeability. The disadvantages of preplaced-aggregate concrete are that costs are increased and lock-closure time would be unacceptably long. Precast concrete stay-in-place forms are not recommended because vertical panels would have to be vertically stacked. This type of panel placement is not recommended because of alignment and attachment concerns. Additionally, the wall armoring to be installed does not lend itself to using this approach.

The recommended method of resurfacing is to remove one to two feet of old concrete from the face of the lockwall and replace it with new portland cement using conventional concrete forming and placing techniques.

Type of Analysis Used

Quantifying benefits that will result from the proposed rehabilitation is, as mentioned in the report, not an easy task. The total transportation resource savings (Gross rate savings minus delay costs) are $325,250,000. These savings can be broken-down into:

1. Reduction in routine traffic disruption due to down-time attributable to mechanical failure
2. Avoidance of a low probability, high impact events
3. Reduction of future maintenance costs

The calculations of transportation resource savings are based on the following assumptions:

1. Commodity traffic will grow at the medium growth rate specified in the *1988 Inland Waterway Review* from a base year of 1988.
2. System capacity is added to the Upper Mississippi River as it is economically justified.
3. The economic life of the rehabilitation begins upon completion of the project and ends when an additional chamber is economically justified. Benefits during this period are discounted to the year the project is complete. Under this assumption, the economic life is 34 years for the Lockport Lock, 38 years for the Brandon Road Lock, 50 years for the Dresden Island Lock, and 26 years for Marseilles Lock.
4. The navigation season is 365 days.

Estimates of traffic disruption are based on the study by Kelejian, A MODEL OF STALLS AND STALL DURATION. The Kelejian study indicated that stalls attributable to mechanical failure at locks on the Upper Mississippi River occur with a probability of 0.00471 per tow lockage, with an expected duration of 131 minutes. Rehabilitation projects of this

type are not expected to significantly reduce stalls of less than one day. Therefore stalls of less than one day are not evaluated in this economic analysis.

Estimation of the probability of infrequent high-impact events, such as the 1987 gate failure at the Marseilles Lock, is based on assumptions. It was felt that the low frequency of occurrence of these events make it impossible to estimate probabilities from the statistical record. As such, a probability density function is presented, which allows an estimate of the total probability of stall of 1 to 90 days to be calculated. This is used in conjunction with a function that relates the length of a stall to its economic cost to calculate the yearly loss due to these high impact events.

Estimates of the maximum number of years major rehabilitation could be delayed and still maintain a minimum acceptable condition level are presented, based on engineering judgement. Beyond this point either the function of the item is predicted to be inadequate, significant cost increases result from the level of deterioration, or there is an unacceptable risk of failure.

Applicability of Prototype Simulation Model

This major rehabilitation report appears to be particularly appropriate for an application of the prototype simulation model. The probability density function for high impact events that is presented in the report could be used to set the probability of unsatisfactory performance in the simulation model. This probability density function and the other costs and benefits that are presented appear to be sufficient to apply the prototype simulation model.

MISSISSIPPI RIVER FULTON, ILLINOIS LOCK AND DAM NO. 13 MAJOR REHABILITATION REPORT - JUNE 1991

Background

Lock and Dam No. 13 is a unit of the Inland Waterway Navigation System of the Upper Mississippi River Basin. It is located at river mile 522.5 in the vicinity of Fulton, Illinois, and controls a pool of 34.2 miles. It was constructed between 1935 and 1938 and placed in operation in May 1939. The facility is composed of:

- A main lock with dimensions of 600' long and 115' wide on the Illinois shore with a maximum lift of 11 feet. The upper miter gate is 25' high and the lower miter gate is 30' high. There are 4-tainter valves to control filling.

- A partially constructed emergency lock chamber with dimensions of 110' by 360' long with a single set of 30' high miter gates.

- A dam of 14,456' length composed of a 1066' gated section (3-roller gates and 10-tainter gates), a 11,360' non-submersible earth dam, a 1650' submersible earth dam, 180' transition section, and 200' of storage yards.

There has been no major rehabilitation of the facility and only routine maintenance and repair has occurred, and resulted from damage caused by towboats.

The report was prepared by the Rock Island District and addresses alternative and recommended rehabilitation plans.

Proposed Work Effort

The proposed work effort consists of the following components:

- Lock walls, guidewalls & walking surfaces: removal and replacement of concrete and armor.
- Main lock miter gates: overhaul and paint and replace fenders (by hired labor-costs not included)
- Emergency lock miter gates: silt removal, overhaul, painting (by hired labor-costs not included)
- Main lock miter gate machinery: removal and replacement
- Lock tainter valve machinery: removal and replacement
- Lock electrical equipment: removal and replacement
- Dam piers: sealing, regrouting, cleaning and painting

- Roller gates: cleaning and painting; replacement of switchgears and wiring
- Tainter gates: cleaning and painting; replacement of switchgears, lower portion of hoisting chains and wiring
- Service bridge: Regrouting and replacement of grating
- Emergency bulkheads: Sandblasting, painting and replacement of seals
- Scour protection: Additional scour protection (riprap & rock fill)
- Storage yard tracks: Replacement of ties and ballast
- Overflow section: fill voids
- Non overflow section: Riprap

Total rehabilitation cost estimate is $25,400,000 spaced over a 5-year (1992-1996)period. Various alternative designs and plans were studied.

Type of Analysis Used

The economic analysis used in this report is based on the National Economic Development (NED) criteria. Basic assumptions in the analysis included:

- Medium growth rate for commodity traffic
- System capacity is added to the Upper Mississippi River as economically justified
- Work requiring lock closure will be done in the winter so traffic is not disrupted

Benefits of rehabilitation accrue from three areas:

- Reduction in routine traffic disruption due to downtime. Delay costs are calculated based on present value of difference between stall costs with and without rehab for 10 year period using expected values. Stalls attributable to mechanical failure will occur with a probability of 0.0047 per tow lockage with an expected duration of 131 minutes. These values remain constant without rehabilitation. With rehabilitation, the probability is reduced by 30% and duration by 25%. (Based on "A Model of Stalls and Stall Duration" by H.H. Kelejian, University of Maryland, 1990). Present value of savings in this category associated with rehabilitation are estimated at $115,000 for 10-year period.

- Avoidance of low probability, high impact events such as gate failure. Such events are classified as resulting in navigation haltage for one day or more. A distribution of length of stall and a cost per day for stalls were assumed and the expected present worth was calculated as $10.39 million for a 10-year period. No such events were assumed to occur if rehabilitation took place.

- Reduction in future maintenance costs. Future major maintenance costs that would be avoided due to rehabilitation were estimated by calculating the present worth of rehabilitation if it was delayed as long as possible while still maintaining a minimum acceptable condition level based on engineering judgment. Estimated cost was $14,397,500.

The total annual benefits and costs were $2,230,500 and $2,091,300 respectively resulting in a B/C ratio of 1.07.

Applicability of Prototype Simulation Model

The analysis used in the study was essentially a static analysis incorporating only a minimal probabilistic component. However, the basic concepts associated with the prototype simulation model could be used for Lock and Dam No. 13. In this case, each of the items would correspond to separate sub-components. Potential required modifications needed for the prototype (i.e., differences from the hydro power plant applications for which the prototype was initially tested) include:

- the time scales associated with repairs of failures at the lock and dam are generally on the order of hours, days and possibly weeks as opposed to the months and years at power plants;

- the factors affecting usage of the lock and dam are generally treated as a random variable (i.e. vessels arrive at different intervals);

- seasonal variations may exist for both vessel arrival frequencies and for probabilities and consequences associated with losing the pool under certain failure conditions. However, the report does not consider either of these phenomena. Therefore, the need for seasonal variation is not certain.

GULF INTRACOASTAL WATERWAY, TEXAS GALVESTON TO CORPUS CHRISTI SEGMENT MAJOR REHABILITATION REPORT - JUNE 1992

Background

This report addresses the rehabilitation of navigation structures on the Galveston to Corpus Christi segment of the Gulf Intracoastal Waterway (GIWW). Specifically, the rationale for rehabilitation of two structures is presented: 1) the Colorado River Locks; and 2) the Brazos River Floodgates. This segment of the GIWW is 194 miles long, 125 feet wide and 12 feet deep. The two crossings are approximately 40 miles apart. Approximately 16 million tons of cargo moved through this segment of the GIWW in 1988 of which about 90% was petrochemical related.

The Colorado River Locks are located at Matagorda, Texas at the intersection of the Colorado River and the GIWW on each side of the Colorado River. The locks serve the dual purposes of navigation and sediment control. As locks, they raise vessels from the level of the GIWW to the river level or vice versa, a distance of up to 10 feet. As sediment control structures, they reduce maintenance dredging by decreasing the trapping effects of the GIWW near the intersection. The two locks, approximately 3000 feet apart, each consist of a 1200 foot lock chamber, a mooring wall, and sets of two 25-foot high sector gates.

The Brazos River Floodgates are located on the GIWW approximately 7 miles southwest of Freeport, Texas at the intersection of the GIWW and the Brazos River on each side of the river. The purpose of the floodgates are to reduce currents and to reduce sand and silt deposition in the GIWW as a result of high water stages n the Brazos River. The two floodgates, 2500 feet apart, consist of two 25-foot high sector gates. The difference in water surface elevation between the GIWW and the river seldom exceeds 2 feet; however, this relatively small head can cause significant shoaling and vessel handling problems.

Proposed Work Effort

Construction of the Galveston Bay to Corpus Christi section of the GIWW was begun in 1930 and enlarged to its present dimensions in 1943-1944. The Colorado River Locks were constructed in 1942-1944 as floodgates, additional guidewalls were added in 1950, and the floodgates converted to locks in 1955. Construction of the Brazos River Floodgates took place in 1942-1946 with additional guidewalls added in 1951. Due to deterioration in the guidewalls at both sites, a systematic plan for replacing the guidewalls was begun in Fiscal Year 1988 under the Major Operations and Maintenance Program. Contracts to replace the guidewalls at the West Gate of the Brazos River Floodgates were awarded in FY 1990 and at the West Lock of the Colorado River Locks in FY 1991. This report addresses the replacement of the other

guidewalls that have not yet been replaced (East Gate at the Brazos River Floodgates and East Lock West Gate at the Colorado River Locks).

The guidewalls that are being recommended for replacement are in a state of advanced distress due to natural processes. Corrosion has reduced the thickness of the sheet piling in places which has reduced the effectiveness of both the anchor rods and fasteners and reduced the embedment of the sheet piling.

Alternative strategies that were considered for the guidewalls included: 2 emergency repair plans, 5 rehabilitation plans, 2 alternative rehabilitation plans that were rejected prior to detailed evaluation, and 3 rehabilitation alternatives that were eliminated during initial screening. The five rehabilitation plans that were considered are summarized below:

Plan 1 - Splice tops of guidewalls and replace anchor rods.

Plan 2 - Splice tops of guidewalls, drive piling approximately 7 additional feet, and replace anchor rods.

Plan 3 - Splice tops of guidewalls, splice anchor rods, and place toe protection.

Plan 4 - Complete replacement of all guidewall materials.

Plan 5 - Complete removal of guidewalls, install timber pile clusters, provide helper boat.

Type of Analysis Used

An engineering analysis has been performed to determine the reliability and the probability of unsatisfactory performance of the guidewalls in terms of anchor rod tension, bending stress and loss of embedment. Estimates were made for original condition, year 1991, year 1994 and year 2001.

The economic analysis used to evaluate alternatives was based on National Economic Development (NED) benefits. All calculations were based on expected value analysis. Benefits are determined as the difference between the costs incurred under operating the facilities 'as-is' assuming emergency repairs as needed versus the costs incurred under the various rehabilitation alternatives. Two basic assumptions made in the analysis were:

- If there is a failure, then vessel operators would choose to operate normally until they encountered a backlog and would then wait for the channel to reopen

- For alternatives 1, 2 and 3, the project design lives are 5, 15 and 15 years respectively. Following this period, it was assumed that the guidewalls would then be totally replaced (plan 4).

The economic analysis of Plan 5 differed from the others in that it was assumed that there was no probability of unsatisfactory performance. Only construction and replacement costs, costs of the helper boat, and costs of additional delays were considered. Potential accidental problems associated with use of the helper boat, unavailability of the helper boat, etc. were not considered in the analysis.

It should be noted that in Plans 1 through 3, the initial costs exceeded the cost of full replacement. Additionally, these measures were relatively short lived (5-15 years) compared to full replacement, were assumed to require replacement of the guidewalls at the end of their project life, and were susceptible to failure. As a result, based on the assumptions and estimates in the report, plans 1, 2 and 3 are clearly economically inferior to plan 4 without performing sophisticated simulation or expected value analysis.

Applicability of Prototype Simulation Model

The basic concepts associated with the prototype simulation model could be used for the GIWW situation. In this case, there is only a single component (the guidewall) though there are different ways in which it could fail. Potential required modifications needed for the prototype (i.e. differences from the hydropower plant applications for which the prototype was initially tested) include:

- the time scales associated with repairs of failures at the locks and floodwalls are generally on the order of hours, days and possibly weeks as opposed to months and years at power plants;

- the factors affecting usage of the lock are generally treated as a random variable (i.e. vessels arrive at different intervals) and could vary substantially by season.

MISSISSIPPI RIVER LOCK AND DAM NO. 25 MAJOR REHABILITATION REPORT - JUNE 1992

Background

Lock and Dam No. 25 is part of the overall plan to provide a 9-foot channel on the Mississippi River from the mouth of the Missouri River to Minneapolis, Minnesota. It is located on the Mississippi River at river mile 241.1 near Winfield, Missouri.

The facility was constructed during the period from 1935 to 1939 at a cost of $ 8,687,600. It is composed of:

- Fourteen 60 foot wide by 25 foot high tainter gates;
- Three 100 foot wide roller gates;
- A single 600 foot long by 110 foot wide lock with miter gates at each end;
- Guidewalls approximately 600 feet long upstream and downstream of the lock landwall;
- A dummy auxiliary lock bay with a currently non functioning miter gate and a rock dike closure to seal off the bay.

The report was prepared by the St. Louis District of the Corps of Engineers. It addresses portions of the project that are in obvious distress and that require rehabilitation under the Major Rehabilitation Program or under repair as part of the O&M program.

Proposed Work Effort

The physical condition of the lock and dam is consistent with its age of 53-years which exceeds its design life of 50-years. The condition reflects its constantly increasing utilization and the adverse effects of winter navigation. Some repairs were made at the facility in the winter of 1991-1992 but the lock could only be partially unwatered because of chronic foundation problems.

The proposed major rehabilitation items are described below:

a) Miter Gates in Main Lock - These gates are in an advanced stage of distress. Repairs and associated lock closures are very costly and occur frequently and do not increase the reliability of the gates. Proposed rehabilitation is to replace miter gates with new vertically framed welded gates.

b) Culvert Tainter Valves - There has been loss of cross sectional area due to corrosion and reduced strength due to fatigue. Proposed rehabilitation is to

remove the four culvert tainter valves and to replace them with new welded valves.

c) Auxiliary Lock Closure Structure - Corrosion and rust rendered the miter gates in the dummy auxiliary lock bay unreliable in 1979. The rock closure dam that was subsequently installed is currently experiencing increasing seepage levels. Proposed rehabilitation is to use the rock dam as a coffer dam, replace the miter gates, and to then remove the rock dam.

d) Lock Dewatering - This process cannot currently be done safely due to loss of foundation material and is needed for repairs and zebra mussel control. Proposed rehabilitation is installation of deep wells through the lock floor and filling of voids.

e) Illinois Abutment - Scour has caused some movement and development of voids. Proposed rehabilitation includes rip rap, slope stabilization and sealing the monolith joint.

f) Sandy Slough Bridge - This bridge provides land access to the lock and dam. Due to deterioration of superstructure and foundation, there is currently a 15-tom load limit. Proposed rehabilitation is removal of existing bridge and replacement with a new single lane bridge.

g) Power Distribution System - This system that provides power to the lock and dam facility has experienced deterioration to some components. Proposed rehabilitation includes replacement of transformers, switchboard, cables and raceway, and routine maintenance of generator.

h) Motors and Controllers - These components are currently outmoded and unsafe. Proposed rehabilitation include replacement of miter gate motors and culvert valve motors and controllers.

i) Control System - Proposed rehabilitation of this outmoded system includes replacement of control system, shelters and limit switches.

j) Miter Gate Machinery - Due to pitting, the proposed rehabilitation is replacement.

Other items (e.g., piezometers, some motors and controllers, lighting, etc.) do not meet major rehabilitation criteria and are recommended for repair under O&M programs.

Type of Analysis Used

The economic analysis used in this report is based on the National Economic Development (NED) criteria. A risk based benefit-cost analysis based on expected values was employed to determine the costs associated with the no-rehabilitation plan and the benefit-cost ratio associated with recommended rehabilitation plans. Benefits of rehabilitation stem primarily from reduced expected transportation resource costs (due to increased operating efficiencies, decreased likelihood of chamber unavailability, etc.) and from reductions in future maintenance costs. NED costs accrue from the costs of the rehabilitation costs, detrimental impacts during rehab, and future maintenance costs associated with the rehabilitation.

In the expected value analysis, the economic costs associated with potential states of lock function are weighted by their probability of occurrence and then summed to determine the economic costs without rehabilitation. The expected total economic costs of the 'with rehabilitation' condition consists of the costs of the rehabilitation, the expected maintenance costs, and the reduced (relative to the without rehabilitation) total transportation costs which result from improved lock service.

A reliability index (beta value) and subsequently the probability of unsatisfactory performance (PUP) was estimated for each item with and without rehabilitation using engineering reliability techniques. Consequences of a failure (structural failure or unsatisfactory performance) were determined separately for each item including, in some cases, the costs associated with losing the pool. The results of the analysis were presented in terms of the costs of the recommended plan for each item and the resulting B/C ratio for each item. These results are summarized in Table 1.

A Monte Carlo simulation was used to estimate the economic impacts to commercial navigation using the Lock and Dam for shutdowns of various lengths of time. The @RISK software was used in conjunction with Lotus 1-2-3 to perform the simulation. Traffic was projected for the period from 1990 to 2010 and a normal distribution used to model daily tow arrivals. The resulting table of incremental costs associated with unanticipated lock closures of varying duration were used as input to the expected value analysis.

Applicability of Prototype Simulation Model

The basic concepts associated with the hydropower prototype simulation model could be used for Lock and Dam No. 25. In this case, each of the items would correspond to separate sub-components. Potential required modifications needed for the prototype (i.e., differences from the hydropower plant applications for which the prototype was initially tested) include:

- the time scales associated with repairs of failures at the lock and dam are generally on the order of hours, days and possibly weeks as opposed to the months and years at power plants;

- the factors affecting usage of the lock and dam are generally treated as a random variable (i.e. vessels arrive at different intervals);

- seasonal variations exist for both vessel arrival frequencies and for probabilities and consequences associated with losing the pool under certain failure conditions.

BURNS WATERWAY HARBOR, INDIANA, BREAKWATER MAJOR REHABILITATION EVALUATION REPORT - MARCH 1993

Background

Burns Waterway Harbor is located in northwestern Indiana on the southern shore of Lake Michigan, 28 miles southeast of Chicago. The Burns Harbor breakwater and associated harbor dredging and construction was completed in August, 1970. The existing harbor project consists of: a) a rubble mound north breakwater of 4630 feet and a rubble mound breakwater west arm of 1200 feet; b) an approach channel 30 feet deep and 400 feet wide; c) an outer harbor 28 feet deep; d) an east harbor arm 27 feet deep and 620 feet wide; and e) a west harbor arm 27 feet deep and 620 feet wide. A vicinity map and harbor layout is shown in Figure 1.

Proposed Rehabilitation Work

The feature proposed for major rehabilitation is the rubble mound breakwater (item a). The rubble mound breakwater was constructed using a multi-layer cross section. Bedford Indiana limestone blocks were used for construction of the armor layer. The proposed rehabilitation would provide the opportunity to solve existing problems at the harbor and improve structural and functional reliability, as presented below:

a) Increase the stability of the Burns Waterway Harbor breakwater to reduce future operations and maintenance costs and emergency repair costs;

b) Reduce the transmitted wave conditions inside Burns Waterway Harbor to reduce damages to vessels and reduce delays experienced by cargo-carrying vessels and barges; and

c) Reduce the vulnerability of the Burns Waterway Harbor breakwater to high intensity, low frequency storms to assure increased operation of the harbor facilities.

The breakwater was originally designed to withstand a 13-foot (11.0 second) wave for stability which was estimated to represent a 40-year event. Using current estimation techniques, the 40-year wave event corresponds to a 22-foot (13 second) wave. Historical maintenance records corroborate a greater than expected need for breakwater repair following construction. This leads to an intuitive conclusion that a need for restoring reliability, through major rehabilitation, does exist.

Six separate rehabilitation plans were developed and analyzed:

1) Reef configuration plan: Placement of stone 75 feet lacerate of the existing breakwater.

2) Berm configuration plan: Placement of stone on the lacerate side of the breakwater in a berm-like configuration, 80 feet wide.

3) Lakeside stone placement plan: Placement of large armor stone on the entire lakeside of the existing breakwater.

4) Crest elevation plan with lakeside stone placement: A layer of armor stone is placed on the crest and across the entire lacerate face of the existing breakwater.

5) Harborside stone placement plane: Armor stone was placed on the harborside of the existing breakwater.

6) Special placement plan: The harborside of the breakwater crest is to be restacked into a less permeable configuration.

Analysis Used

The reliability of the breakwater is characterized by the probability of the breakwater to perform its function satisfactorily. These functions include structural performance (static and dynamic) and functional performance (wave transmissivity). For each of the six plans, plus the original 1966 breakwater configuration and the present 1989 breakwater configuration, the probability of unsatisfactory performance (PUP) was estimated. PUP values were estimated for four performance modes: 1) lakeward face (dynamic) instability, 2) landward face (dynamic) instability, 3) lakeward foundation (static) instability, and 4) landward foundation (static) instability. These values were estimated for each of 8 locational segments of the breakwater resulting in a total of 32 probabilities. The probabilities were used in a Monte Carlo simulation to determine the expected benefits and costs for the alternative plans.

The following assumptions were made in the analysis:

1) Period of analysis is 50 years.
2) The price basis for benefits and costs is 1993 dollars.
3) The discount rate is 8.25%.
4) In the absence of major rehabilitation, emergency maintenance will be performed.
5) Emergency repairs are made within a year, however, prior to completion of repairs, the probability of unacceptable wave transmission into the harbor increases.

6) The probability of unsatisfactory breakwater performance and wave transmission are positively correlated with the probability of a damaging event occurring during a year.

7) Historical tends for barge traffic are reasonable indicators for future barge traffic.

8) No further degradation of the breakwater is anticipated over the long term. Emergency repairs return the breakwater to its present state of condition. The PUP values are stationary over time. The probability of unsatisfactory wave transmission increases immediately following a damaging event but return to the present condition following emergency repair.

9) Quarry stone used for emergency repair is limited in quantity and therefore, there is an opportunity cost associated with its extraction and consumption. As a result, cost of quarry stone increases with time.

In Monte Carlo simulation, if damage to a segment occurs, the extent of damage is independent for both the cross-section and the length damaged. For damage to a face, the percent of the cross section that is damaged is calculated based on the random variable X, by an equation of the following form:

$$\% \text{ of x-section damaged} = A + BX - CX^2 + DX^3$$

while for damage due to instability of the foundation, the damage to the cross-section is assumed to be 100%. The percent of damage to the length of the segment is assumed to be randomly distributed over a uniform distribution with a lower and upper bound based on the percentage of cross sectional damage (e.g., if x-section damage > 25%, then at least 25% of the length is damaged). Breakwater repair cost at time t is equal to the total tons damaged:

(% length damaged * length) * (% x-section damaged * x-section area)

multiplied by the cost of armor stone at that time.

The simulation also addresses damages due to transmission of waves into the harbor that can manifest itself in terms of damage to vessels and harbor infrastructure, and vessel delay and emergency rescues. Vessel damage is modeled as a random variable and conditional upon a 3-foot wave or larger being transmitted into the harbor. The probability of transmission depends upon the extent of damage to the breakwater and is adjusted back to the historical value of 75.8% following repairs. If a wave is transmitted, then the probability of damage to a vessel is a random variable based on historical data and the transmission probability. The extent of damage is distributed according to a triangular density function with a minimum value of $10,000, a maximum value of $1,000,000 and a mode of $200,000. The total of vessel damage is also dependent upon the number of barges which is linearly related to the year. A similar probability structure and damage function is used to simulate damage to harbor infrastructure. If a storm produces waves greater than 3 feet, then vessel delay of 7 to 9 days results in a cost of $40,000 per day, escalating with time.

Based on the Monte Carlo simulation, only plan 1 (Segmented reef configuration plan) resulted in a benefit cost ratio exceeding one.

Applicability of Prototype Simulation Model

The existing hydro plant rehabilitation simulation model employs a Monte Carlo simulation with a one-year time step similar to that used in the Burns Harbor formulation. However, there are significant differences in the underlying formulations. The hierarchical feature - sub feature formulation of the prototype would need significant modification to apply to Burns Harbor. In Burns Harbor, the sub-features (segments of the breakwater), are damaged and result in potential for greater damage to the harbor and vessels (which are analogous to the prototype features). More importantly, there are many site specific relationships used in the Burns Harbor formulation which would be needed in the prototype. Production of a general purpose prototype which would be robust enough to support the analysis used in the Burns Harbor report is unlikely. However, production of a general prototype with some general relationships which, with minimal programming effort, could be adapted for use in Burns Harbor appears to be quite reasonable.

UPPER MISSISSIPPI RIVER LECLAIRE, IOWA LOCK AND DAM NO. 14 MAJOR REHABILITATION REPORT - JUNE 1993

Background

Lock and Dam No. 14 is a unit of the Inland Waterway Navigation System of the Upper Mississippi River Basin. It is located at river mile 493.3 near LeClaire, Iowa, and controls a pool of 29.2 miles. It was constructed between 1935 and 1938 at a cost of $ 6,145,000 and placed in operation in June 1939. The present day replacement cost of a lock and dam facility on the Upper Mississippi River is estimated to be in the range of one-half to one billion dollars. The facility is composed of:

- A main lock with dimensions of 600' long and 115' wide on the Iowa shore with a maximum lift of 11 feet. The upper miter gate is 23' high and the lower miter gate is 27' high. There are 4-tainter valves to control filling. Unlike most facilities on the Upper Mississippi River, there is no provision for an auxiliary lock.

- A dam of 2700' length consisting of a 1343' gated section (4-roller gates and 13-tainter gates) and a 1,360' non-submersible earth and rock dam. Emergency bulkheads in the form of steel girder bulkheads and poiree dams provide for emergency closure of the dam.

The report, prepared by the Rock Island District, provides an evaluation of the present condition, past problems, present and future reliability, alternative solutions, repair strategies, and a recommended rehabilitation plan for Lock and Dam 14.

Because this report is one of the most recent reports and generally more detailed than most reports of this type, a more detailed description of this report including several example graphical and tabular displays, is being presented.

Proposed Work Effort

The proposed work effort for Lock and Dam 14 is summarized in Table 1. This table includes the reliability factors, the recommended work, and the cost estimate for each of the components of the facility. The funding source (i.e., major rehabilitation, major maintenance, or both) for each component is shown in Table 2.

The total rehabilitation cost estimate for the proposed plan is $31,247,000. Various alternative designs and plans were studied. Figure 1 contains a layout of the full range of alternatives considered in the study.

Type of Analysis Used

The economic analysis used in this report is based on the National Economic Development (NED) criteria. The NED consequences of rehabilitation are evaluated using probability based methods. Economic costs are estimated for a range of possible consequences of unsatisfactory component performance. The expected economic cost is obtained by summing the product of the consequence and probability of occurrence both with and without rehabilitation condition. The difference in the expected economic costs under with and without project condition is the benefit of component rehabilitation. A schematic of the economic analysis method is presented in Figure 2 and detailed below:

1) The performance of critical elements is estimated using engineering reliability techniques. This yields a reliability coefficient (beta) and a probability of unsatisfactory performance (see Figure 3 for explanation and Figure 4 for an example).

2) The annual frequency of the controlling event (e.g., tow lockages) is estimated from historical performance monitoring system (PMS) data and engineering judgment. This frequency is multiplied by the probability of unsatisfactory performance to yield the expected annual frequency of unsatisfactory performance events.

3) If there are economic consequences of unsatisfactory performance, then the economic consequences for the most likely ($p=0.99$), mid-range ($p=0.099$), and worst ($p= 0.0001$) are determined and multiplied by the probability of the event occurring. This process is shown in an example event tree for one component in Figure 5.

4) If a major component failure occurs, then it is assumed that the component will be repaired to a highly reliable condition. To account for this, in every year, the probability that a major failure has occurred in a previous year is calculated. This factor is used to further condition the above probabilities and reduce the likelihood of unsatisfactory performance.

5) Traffic is estimated for each year and converted to expected tows per day.

6) Component repair cost estimates are made for each failure mode (likely, mid-range, worst). Such costs are assumed to be constant in time except for the case of lock and dam concrete which increases at a fixed rate per year.

7) A navigation simulation model (see below for details) is used to determine the resource costs for various outages/slowdowns associated with different tow arrival per day rates.

8) Using the probabilities and costs described above, NED costs are calculated for each year for each component for the with and without rehabilitation. The present worth of the difference represents the NED benefits for rehabilitation.

The model is written in TK PLUS Solver.

Basic assumptions in the analysis included:

- Medium growth rate for commodity traffic
- System capacity is added to the Upper Mississippi River as economically justified
- Work requiring lock closure will be done in the winter so traffic is not disrupted
- The economic life of the rehabilitation begins upon completion of the project and extends for 25 years. Benefits are discounted to the year the project is complete at an interest rate of 8.25%.
- The navigation season is 275 days (March - November).

Benefits of rehabilitation accrue from three areas:

- Reduced transportation resource costs for commodities arising from restoration of operating efficiencies and from decreased likelihood of chamber unavailability due to unsatisfactory performance of critical structural components. Present value (February 1993) of annual savings in this category were estimated at $ 3,767,600.

- Benefits resulting from the rehabilitated features' reduced expected future repair and maintenance costs under emergency conditions. The expected present worth of annual savings in this category was calculated as $520,400.

- Efficiency gains including incidental lockage time savings resulting from reliability measures and efficiency improvements. Estimated benefits (present worth of annual savings) was $151,500.

The total annual benefits and costs were $4,439,500 and $2,261,400, respectively, resulting in a B/C ratio of 2.0.

Applicability of Prototype Simulation Model

The analysis used in the study was essentially a static analysis incorporating a probabilistic component. However, the basic concepts associated with the prototype simulation model could be used for the Lock and Dam No. 14 situation. In this case, each of

the items would correspond to separate sub components. Potential required modifications needed for the prototype (i.e., differences from the hydro power plant applications for which the prototype was initially tested) include:

- the time scales associated with repairs of failures at the lock and dam are generally on the order of hours, days and possibly weeks as opposed to the months and years at power plants;

- the factors affecting usage of the lock and dam are generally treated as a random variable (i.e. vessels arrive at different intervals);

- seasonal variations may exist for both vessel arrival frequencies and for probabilities and consequences associated with losing the pool under certain failure conditions. However, the report does not consider either of these phenomena so that the need for seasonal variation is not certain.

MISSISSIPPI RIVER LOCK AND DAM NO. 24 MAJOR REHABILITATION REPORT - JUNE 1993

Background

Lock and Dam No. 24 is located on the Mississippi River adjacent to Clarksville, Missouri, 93.5 miles upstream from St. Louis and 273.5 miles above the mouth of the Ohio River. It is part of the authorized Upper Mississippi River plan to provide a 9-foot deep by 400-foot minimum width navigation channel between the mouth of the Missouri River and Minneapolis, Minnesota.

The project was completed in 1940 at a total cost of $6,823,000 and is composed of the following elements:

- A dam containing 15 tainter gates, a storage yard and a fixed submersible stone-covered earth dike. The river width is normally 1650 feet but during high water can inundate the flood plain so that the width swells to 4600 feet.

- A main 600' long by 110' wide reinforced concrete lock with upstream and downstream miter gates of 25' and 30' height respectively.

- An upper gate bay and miter gate for an auxiliary lock which was never constructed. Due to deterioration, a rock fill closure dike with a sheetpile cutoff, designed to prevent loss of pool, was constructed just upstream of the gate in 1982.

- Upstream and downstream guidewalls for the main lock of 520' and 502' length respectively.

- An earth fill overflow dike of 2800' length extends from the east end of the dam to the Sny Island Levee.

The report was prepared by the St. Louis District. The purpose of the report was to provide engineering and economic analyses of items in need of rehabilitation and to provide a plan of remedial action.

Proposed Work Effort

The physical condition of the lock and dam is consistent with its age of 53-years (which exceeds its design life of 50-years), its high utilization which relates to its location near the lower extent of the Upper Mississippi River, and the adverse effects from

winter navigation. The lock was unwatered in winter 1964-1965 and 1991-1992 for repairs and inspection. The lock and dam exhibits evidences of distress and due to the closure of the auxiliary lock, traffic cannot pass during loss of pool.

Proposed rehabilitation includes the following:

- Main lock miter gates: due to fatigue, corrosion and damage, it is recommended that the miter gates in the main lock be replaced with new vertically framed welded gates.

- Culvert tainter valves: due to loss of cross sectional area, it is recommended that the four culvert tainter valves be removed and replaced with new welded valves.

- Auxiliary lock closure dam: though various alternatives were considered, the recommended plan was to convert the closure dam to a cofferdam, remove and install a new miter gate, remove the closure dam and cut bulkhead slots upstream of the new miter gate.

- Bridge column and pier concrete: Due to deterioration in the concrete, the proposed rehabilitation consists of removing and replacing eight (of the 16) bridge support columns.

- Power distribution system: proposed rehabilitation includes replacement of service transformers and appurtenances, 480-volt switchboard, lead-covered cables and the raceways. Only minor maintenance is required for the generator.

- Lock motors and controllers: proposed rehabilitation includes replacement of miter gate motors and controllers, and culvert valve motors and controllers.

- Control system: proposed rehabilitation includes replacement of 480-volt control system, lockwall control shelters, and limit switches for the miter gate, culvert valve and tainter gate.

- Miter gate machinery: as part of rehabilitation, it is proposed that a new machinery system should be installed.

- Outdraft/bendway weirs: The proposed rehabilitation includes the construction of four bendway weirs and a sheet pile cell to keep tows from damaging the lock miter gate. Additionally, three additional debris openings will be placed in the guard wall.

- Tainter gates: The proposed rehabilitation includes reworking the lower portions of the tainter gates with the damaged portions of the skinplate and bracing removed and replaced.

Other items were investigated but they did not meet the major rehabilitation criteria and will be repaired under the O&M program.

Type of Analysis Used

The economic analysis used in this report is based on the National Economic Development (NED) criteria. A risk based benefit-cost analysis based on expected values was employed to determine the costs associated with the no-rehabilitation plan and the benefit-cost ratio associated with recommended rehabilitation plans. Benefits of rehabilitation stem primarily from reduced expected transportation resource costs (due to increased operating efficiencies, decreased likelihood of chamber unavailability, etc.) and from reductions in future maintenance costs. NED costs accrue from the costs of the rehabilitation costs, detrimental impacts during rehab, and future maintenance costs associated with the rehabilitation.

In the expected value analysis, the economic costs associated with potential states of lock function are weighted by their probability of occurrence and then summed to determine the economic costs without rehabilitation. The expected total economic costs of the 'with rehabilitation' condition consists of the costs of the rehabilitation, the expected maintenance costs, and the reduced (relative to the without rehabilitation) total transportation costs which result from improved lock service.

A reliability index (beta value) and subsequently the probability of unsatisfactory performance (PUP) was estimated for each item with and without rehabilitation using engineering reliability techniques. Consequences of a failure (structural failure or unsatisfactory performance) were determined separately for each item including, in some cases, the costs associated with losing the pool and were displayed graphically as in the example diagram in Figure 1. A Monte Carlo simulation was used to estimate the economic impacts to commercial navigation using the Lock and Dam for shutdowns of various lengths of time. The @RISK software was used in conjunction with Lotus 1-2-3 to perform the simulation. Traffic was projected for the period from 1990 to 2010 and a Poisson distribution used to model daily tow arrivals. The resulting table of incremental costs associated with unanticipated lock closures of varying duration were used as input to the expected value analysis.

The results of the expected value analysis were presented in terms of the total NED costs and total NED benefits of the recommended plan for each item and the resulting net NED benefits for each item. These results are summarized in Table 1.

Applicability of Prototype Simulation Model

The basic concepts associated with the prototype simulation model could be used for the Lock and Dam No. 24 situation. In this case, each of the items would correspond to separate sub components. Potential required modifications needed for the prototype (i.e., differences from the hydro power plant applications for which the prototype was initially tested) include:

- the time scales associated with repairs of failures at the lock and dam are generally on the order of hours, days and possibly weeks as opposed to the months and years at power plants;

- the factors affecting usage of the lock and dam are generally treated as a random variable (i.e., vessels arrive at different intervals);

- seasonal variations exist for both vessel arrival frequencies and for probabilities and consequences associated with losing the pool under certain failure conditions.

APPENDIX C

PHASE II DATA MODEL AND TABLE LISTINGS

APPENDIX C: PHASE II DATA MODEL AND TABLE LISTINGS

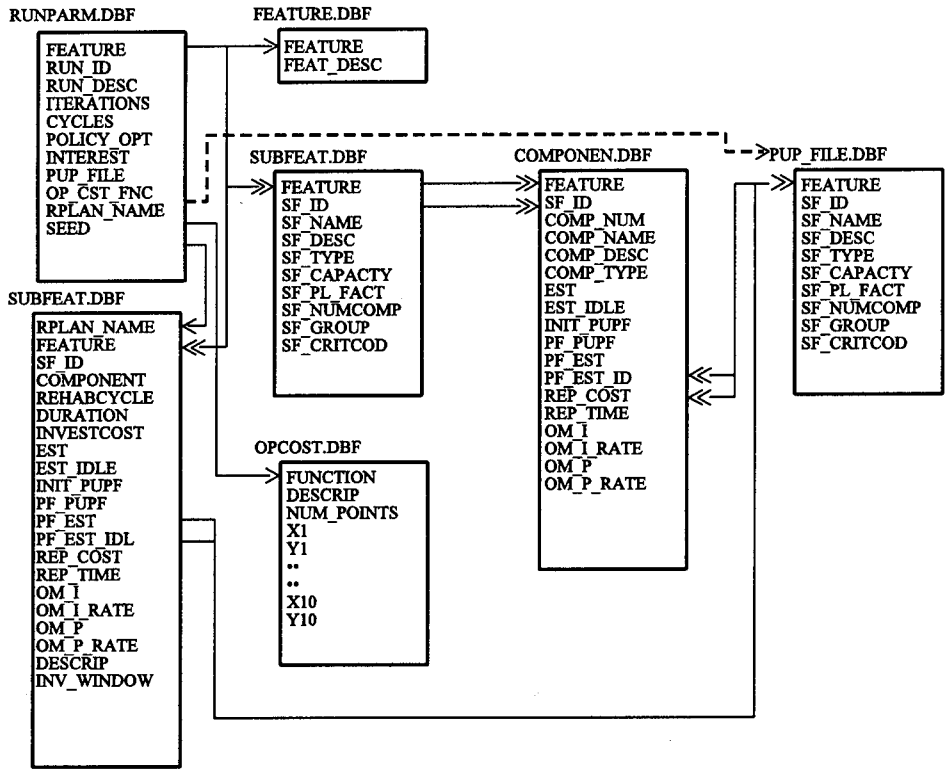

The follwing DBF's are used by the system:

DATABASE	STATUS	DESCRIPTION
RUNPARM DBF	Required	Run parameter information
FEATURE DBF	Required	Feature representation description
SUBFEAT DBF	Required	Subfeature representation description
COMPONEN DBF	Required	Component representation description
OPCOST DBF	Required	Opportunity cost functions
PUPFUN3A DBF	File Required	PUP functions
REHAB DBF	If Used	Rehab plan information
SUMMARY DBF	Required	Output summary information

Rules

- All dbf's must be present in the same directory as the program.
- Note that all text key fields in the dbf's are expected to be in upper case.

Data Structures

RUNPARM.DBF

This database holds record containing information defining run parameters for a simulation run. The key to the database is the RUN_ID field, which should be unique. The Repair program is passed a key value for the RUN_ID (on the command line, together with display switches) and reads RUNPARM.DBF to determine the particular run parameters to be applied.

The database structure is as follows:

Field	Field Name	Type	Width	Description
1	FEATURE	Character	10	Feature Identifier
2	RUN_ID	Character	10	Unique Run Identifier
3	RUN_DESC	Character	80	Run Description
4	ITERATIONS	Numeric	5	# iterations for run
5	CYCLES	Numeric	6	# of cycles per iteration
6	POLICY_OPT	Numeric	2	Policy Option
7	INTEREST	Numeric	9.6	Interest Rate
8	PUP_FILE	Character	12	PUP File Name
9	OP_CST_FNC	Numeric	3	Opportunity Cost Func. #
10	RPLAN_NAME	Character	10	Rehab Plan Identifier
11	SEED	Numeric	10	Random Number Seed

FEATURE.DBF

This database currently is used only to store a description for each feature representation. Although it is currently required to be present for program execution, it is not in fact used by the program, but should be used by the interface. The structure is:

Field	Field Name	Type	Width	Description
1	FEATURE	Character	10	Feature Identifier
2	FEAT_DESC	Character	80	Description

SUBFEAT.DBF

This database stores information about each subfeature within a feature. The unique key is FEATURE + SF_ID.

Field	Field Name	Type	Width	Description
1	FEATURE	Character	10	Feature Identifier
2	SF_ID	Character	10	SubFeature Identifier
3	SF_NAME	Character	30	SubFeature Name
4	SF_DESC	Character	50	SubFeature Description
5	SF_TYPE	Character	20	SubFeature Type
6	SF_CAPACTY	Numeric	10	Generating Capacity (kw)
7	SF_PL_FACT	Numeric	3	Plant Factor (0-100)
8	SF_NUMCOMP	Numeric	2	# of components in Subfeat.
9	SF_GROUP	Numeric	2	SubFeature Group
10	SF_CRITCOD	Numeric	1	Critical Code (1=critical)

SF_NAME, SF_DESC, and SF_TYPE are currently for informational purposes only.

COMPONEN.DBF

This database stores information about each component within a subfeature/feature. The unique key is FEATURE + SF_ID + COMP_NUM.

Field	Field Name	Type	Width	Description
1	FEATURE	Character	10	Feature Identifier
2	SF_ID	Character	10	SubFeature Identifier
3	COMP_NUM	Numeric	2	Component # in SubFeature
4	COMP_NAME	Character	30	Name
5	COMP_DESC	Character	50	Description
6	COMP_TYPE	Character	20	Type
7	EST	Numeric	6.1	Effective Service Time
8	EST_IDLE	Numeric	5.3	EST change when idle
9	INIT_PUPF	Numeric	3	Initial PUP Function #
10	PF_PUPF	Numeric	3	Post-Fix PUP Function #
11	PF_EST	Numeric	6.1	Post-Fix EST
12	PF_EST_IDL	Numeric	5.3	Post-Fix EST change in idle
13	REP_COST	Numeric	10.1	Repair Cost
14	REP_TIME	Numeric	4	Repair Time
15	OM_I	Numeric	15.1	Initial O&M Cost
16	OM_I_RATE	Numeric	7.5	Initial O&M Change Rate
17	OM_P	Numeric	15.1	Post-Fix O&M Cost
18	OM_P_RATE	Numeric	7.5	Post-Fix O&M Change Rate

COMP_NAME, COMP_DESC, and COMP_TYPE are descriptive information only. The PUP Function numbers (INIT_PUPF, PF_PUPF) reference the currently selected PUP function file, as set in RUNPARM.DBF.

REHAB.DBF

This database stores information on a given rehabilitation plan for a feature. The unique key is FEATURE + RPLAN_NAME + SF_ID + COMPONENT, i.e. a particular rehab plan for a given component in a representation. The rehab plan is set for the run in RUNPARM.DBF.

Field	Field Name	Type	Width	Description
1	FEATURE	Character	10	Feature ID
2	RPLAN_NAME	Character	10	Rehab Plan Identifier
3	SF_ID	Character	10	SubFeature Identifier
4	COMPONENT	Numeric	3	Component # in SubFeature
5	REHABCYCLE	Numeric	4	Cycle at which rehab occurs
6	DURATION	Numeric	4	Duration of Rehab
7	INVESTCOST	Numeric	15.1	Investment Cost
8	EST	Numeric	6.1	Post-Rehab Parameter
9	EST_IDLE	Numeric	5.3	" "
10	INIT_PUPF	Numeric	3	" "
11	PF_PUPF	Numeric	3	" "
12	PF_EST	Numeric	6.1	" "
13	PF_EST_IDL	Numeric	5.3	" "
14	REP_COST	Numeric	10.1	" "
15	REP_TIME	Numeric	4	" "
16	OM_I	Numeric	15.1	" "
17	OM_I_RATE	Numeric	7.5	" "
18	OM_P	Numeric	15.1	" "
19	OM_P_RATE	Numeric	7.5	" "
20	DESCRIP	Character	40	Description
21	INV_WINDOW	Numeric	4	Investment Window

Here, the Post-Rehab parameters replace the corresponding parameters for the given component, when the rehab step is complete. Note that the Investment Window capability is not yet implemented.

Function DBF's

OPCOST.DBF stores opportunity cost functions. A PUP function dbf must be available as well, but the particular name of the PUP function dbf to be used for the run is set in the RUNPARM record. The unique key is FUNCTION, currently a numeric. Both types of dbf have identical structure, as follows:

Field	Field Name	Type	Width	Description
1	FUNCTION	Numeric	9	
2	DESCRIP	Character	26	
3	NUM_POINTS	Numeric	9	
4	X1	Numeric	15.1	
5	Y1	Numeric	15.1	
6	X2	Numeric	15.1	
7	Y2	Numeric	15.1	
8	X3	Numeric	15.1	
9	Y3	Numeric	15.1	
10	X4	Numeric	15.1	
11	Y4	Numeric	15.1	
12	X5	Numeric	15.1	
13	Y5	Numeric	15.1	
14	X6	Numeric	15.1	
15	Y6	Numeric	15.1	
16	X7	Numeric	15.1	
17	Y7	Numeric	15.1	
18	X8	Numeric	15.1	
19	Y8	Numeric	15.1	
20	X9	Numeric	15.1	
21	Y9	Numeric	15.1	
22	X10	Numeric	15.1	
23	Y10	Numeric	15.1	

NUM_POINTS should range from 1 to 10, indicating the number of points in the piece-wise linear representation.

SUMMARY.DBF

This database stores information on each run of the model. There is no unique key, but the combination of RUN_ID, RUN_DATE, and RUN_TIME refers to a particular run of the model. Input information is copied from RUNPARM.DBF. The VERSION field is set by the current program version being run. Output information (fields 14 through 22) is set by the results of the model run.

Field	Field Name	Type	Width	Description
1	RUN_ID	Character	10	Run Identifier
2	RUN_DATE	Date	8	Date of Run
3	RUN_TIME	Character	5	Time of Run
4	VERSION	Numeric	5.2	Program Version Being Run
5	SEED	Numeric	10	Random Number Seed
6	FEATURE	Character	10	Feature Identifier
7	RPLAN_NAME	Character	10	Rehab Plan Identifier
8	PUP_FILE	Character	12	PUP Function DBF name
9	POLICY_OPT	Numeric	2	Policty Option
10	ITERATIONS	Numeric	5	# iterations
11	CYCLES	Numeric	6	# of cycles per iteration
12	INTEREST	Numeric	9.6	Interest Rate
13	OP_CST_FNC	Numeric	3	Opportunity Cost Func. #
14	RPCOST_AVG	Numeric	15.1	Average Repair Cost
15	RPCOST_STD	Numeric	15.1	Repair Cost Std Deviation
16	OPCOST_AVG	Numeric	15.1	Average Opportunity Cost
17	OPCOST_STD	Numeric	15.1	Op. Cost Std. Deviation
18	OMCOST_AVG	Numeric	15.1	Average O&M Cost
19	OMCOST_STD	Numeric	15.1	O&M Cost Std. Deviation
20	TOTAL_AVG	Numeric	15.1	Average Total Cost
21	TOTAL_STD	Numeric	15.1	Total Cost Std. Deviation
22	STANDERROR	Numeric	15.1	Standard Error on Tot Cost
23	RUN_DESC	Character	80	Run Description

APPENDIX D

PHASE II PROCESSING FLOW

APPENDIX D: PHASE II PROCESSING FLOW

The addition of the idle capability significantly complicates the flow of processing. If a component can be idled by another component in the sub-feature failing, we need to know the state of all components in the sub-feature before finally assigning the state of the idled component. Similarly, if a sub-feature can be idled by the failure of a critical sub-feature in the same sub-feature group (the switchyard problem), then we need to know the state of all sub-features. The overall objective is to create a transform of the state array for components and sub-features, from one cycle to the next.

This leads to the concept of tentative states, and a process by which we start at the sub-feature level, assign tentative states to the components, go back up and assign tentative states to the sub-features, handle the sub-feature interactions, assign final sub-feature state, and then go back down and assign the final component states.

A key question is whether we test a component (for failure) that is operating, before we know if it would have been idled by 'outside forces'. The model tests each potentially operating component in a sub-feature that is not currently down or idle. No component that is idle in the current cycle will be tested for failure, but it can undergo scheduled rehab if idle.

All activities are assumed to take place at the start of a cycle. The concept of processing order has been eliminated. All sub-features are handled. Thus, even if a critical sub-feature fails, other sub-features in that group are not automatically idled, but can also fail independently. [Under the 'processing order' approach, the critical sub-feature is tested first, and related sub-features are automatically idled if the critical feature fails, without testing.]

It is necessary to store, for each component and each sub-feature, the cycle at which it becomes operational [back-in-service cycle]. When a sub-feature goes down due to a failure or rehab of another sub-feature or a component, the time to repair is known, and can be propagated to the other components/sub-features. Thus, the back-in-service cycle for a sub-feature is either the maximum of the back-in-service cycles for components within the sub-feature, or is equal to the back-in-service cycle for the critical sub-feature whose failure or rehab has idled the current sub-feature. The back-in-service cycle vectors are revised at the beginning and end of processing for each cycle.

The process for each cycle is as follows:

1) Set tentative sub-feature status - determine if a sub-feature that is down/idle comes back into service in the current cycle, and reset the sub-feature state vector accordingly.

2) For each sub-feature, process each component in the sub-feature, as follows:

Set the tentative component status, based on the tentative sub-feature status state vector and the back-in-service cycle for the component. If the tentative sub-feature status is 'operating', then by definition all components in the sub-feature must be back in service by the start of the cycle, and are thus set tentatively to 'operating'. If the tentative sub-feature status is 'down', then the components must all be either idle or under repair/rehab.

If scheduled rehab is to be applied to the component in the current cycle (allowable if the component is idle or operating, and within the component repair window), then the component status is set accordingly, as is the back-in-service cycle for the component.

We now have a tentative status for each component.

3) If all components in the sub-feature are operating, then we test each component, through the random number generator - PUP function test, to set the component status - broken or operating. If any component fails, then the status is set, as is the back-in-service cycle. Note that we have not yet determined whether or not we will fix the broken component (policy option 0) or fix all components (policy option 2).

4) We proceed to reset the sub-feature state, based on the component states. This is only a tentative state, because we have not yet looked at the interactions with critical sub-features. The sub-feature state should either be down or operating at this point, not idle. A sub-feature can only be idled through the failure of a critical sub-feature in its group.

5) When a tentative state for all sub-features has been set, then a 'group state vector' can be set. This state vector is re-set to 0 at the beginning of each cycle, and re-calculated from the sub-feature states each time. Each sub-feature is identified as a member of a group (as part of the input data). If a sub-feature has been designated as a critical sub-feature in that group, then if that sub-feature is down, the group is assigned the 'down' status. All operating sub-features in the group are then idled, and the back-in-service cycle is set accordingly.

6) Each sub-feature has now been assigned its final status, either down, operating, or idle. Each component in each sub-feature is now processed. The fixer object is consulted, and, based on the policy, component status, and sub-feature status, determines whether to repair, idle, or leave the component as is. Back-in-service cycle information is updated, costs are assigned, present values calculated, and the component status is reset accordingly. This completes the processing cycle.

To illustrate this process, consider the following example. A feature is composed of three sub-features. Each sub-feature consists of two components. Sub-features 1 and 2 are in group I, and sub-feature 1 is critical to the group. Sub-feature 3 is in group II. The components are as follows:

SubFeature	Component	Time to Repair
1	1	2
1	2	1
2	3	2
2	4	1
3	5	2
3	6	1

Assuming that component 5 fails in cycle 0, component 4 fails in cycle 1, and component 1 fails in cycle 3, then the status of the components through the first 5 cycles (status at the end of each cycle) is as follows:

component	0	1	2	3	4
1	O	O	O	E R	ER
2	O	O	O	IC	IC
3	O	IC	O	IS	IS
4	O	ER	O	IS	IS
5	E R	ER	O	O	O
6	IC	IC	O	O	O

where O = operating, ER = emergency repair, IC = idle due to component failure in the sub-feature, and IS = idle due to the sub-feature being idled.

The corresponding back-in-service array is as follows (where a value of 0 indicates that it is in service):

component	0	1	2	3	4
1	0	0	0	5	5
2	0	0	0	5	5
3	0	2	0	5	5
4	0	2	0	5	5
5	2	2	0	5	5
6	2	2	0	5	5

For the sub-features, these matrices are:

SubFeat	0	1	2	3	4
1 (Critical)	O	O	O	D	D
2	O	D	O	I	I
3	D	D	O	O	O

where O is again operating, D = down, and I = idle. The back-in-service matrix is:

SubFeat	0	1	2	3	4
1 (Critical)	0	0	0	5	5
2	0	2	0	5	5
3	2	2	0	0	0

The group status matrix is thus as follows:

Group	0	1	2	3	4
I	0	0	0	1	1
II	0	0	0	0	0

where a value of 0 indicates that the group has no critical sub-feature that has failed, and a value of 1 indicates that the group has a critical sub-feature that is down.

Consider the situation when starting cycle 1. The sub-feature back in service vector for cycle 0 shows that features 1 and 2 are potentially operating in cycle 1, while subfeature 3 will continue to be out of service until cycle 2. For subfeature 1, components 1 and 2 are potentially operating, are tested, and neither fails. For subfeature 2, components 3 and 4 are tested, and component 4 fails. Its status is set to broken, with a repair time of 1 cycle. The back in service matrix is set to 2 for component 4, indicating that the component will be back in service at the start of cycle 2. For sub-feature 3, examining the back in service matrix indicates that it is still out of service in cycle 1. Thus, no component can be set to operating. The components are set, and in fact maintain the same status as the previous cycle. We can now set the group status, and no critical sub-feature is down.

REPORT DOCUMENTATION PAGE

Form Approved
OMB No. 0704-0188

Public reporting burden for this collection of information is estimated to average 1 hour per response, including the time for reviewing instructions, searching existing data sources, gathering and maintaining the data needed, and completing and reviewing the collection of information. Send comments regarding this burden estimate or any other aspect of this collection of information, including suggestions for reducing this burden, to Washington Headquarters Services, Directorate for Information Operations and Reports, 1215 Jefferson Davis Highway, Suite 1204, Arlington, VA 22202-4302, and to the Office of Management and Budget, Paperwork Reduction Project (0704-0188), Washington, DC 20503.

1. AGENCY USE ONLY *(Leave blank)*

2. REPORT DATE
September 1994

3. REPORT TYPE AND DATES COVERED

4. TITLE AND SUBTITLE
Development of Prototype Software for Risk-Based Benefit Cost Analysis of Major Rehabilitation Proposals-Phases I and II

5. FUNDING NUMBERS

6. AUTHOR(S)
Richard M. Males, Walter M. Grayman and Craig A. Strus

7. PERFORMING ORGANIZATION NAME(S) AND ADDRESS(ES)
Planning and Management Consultants, Ltd.
Route 9 Box 15 (Highway 51 South)
P.O. Box 1316
Carbondale, IL 62903

8. PERFORMING ORGANIZATION REPORT NUMBER

9. SPONSORING/MONITORING AGENCY NAME(S) AND ADDRESS(ES)
U.S. Army Corps of Engineers
Water Resources Support Center
Institute for Water Resources
7701 Telegraph Road
Alexandria, VA 22315-3868

10. SPONSORING/MONITORING AGENCY REPORT NUMBER
IWR Report 94-R-5

11. SUPPLEMENTARY NOTES
Available from the National Technical Information Service, 5284 Port Royal Road, Springfield, VA 22161, (703) 487-4650)

12a. DISTRIBUTION/AVAILABILITY STATEMENT
Unlimited\Unclassified

12b. DISTRIBUTION CODE

13. ABSTRACT *(Maximum 200 words)*
This report documents the work done on the enhancement of a prototype simulation model for the risk-based economic analysis of proposals for major rehabilitation projects of Corps of Engineers' facilities during the period from September 1993 through October 1994. The original concept, design, and prototype development of the model began in December 1992 and the initial phase of the work, the building and testing of a Phase I prototype, concluded in August 1993, with an implemented prototype. This work was documented in an unpublished technical report for the Institute for Water Resources, parts of which are abstracted herein. The success of the initial model development, in particular in terms of ease of use, flexibility and speed of operation as compared to existing, spread-sheet based methods, led to the determination to pursue further prototype development. The current work, Phase II, included additional efforts involving review of existing rehabilitation proposals, enchancement of the model, enhancement of the user interface, and conceptual design and proof-of-concept testing of a model oriented towards navigation projects.

14. SUBJECT TERMS
Risk analysis, Monte-Carlo Analysis, rehabilitation, hydropower, navigation, simulation

15. NUMBER OF PAGES
161

16. PRICE CODE

17. SECURITY CLASSIFICATION OF REPORT	18. SECURITY CLASSIFICATION OF THIS PAGE	19. SECURITY CLASSIFICATION OF ABSTRACT	20. LIMITATION OF ABSTRACT
Unclassified	Unclassified	Unclassified	Unlimited