US Army Corps
of Engineers
Hydrologic Engineering Center

Analysis of Interior Flood Damage Reduction Measures Napa River, Napa, CA

February 1996

19960719 101

Approved for Public Release. Distribution Unlimited.

PR-27

DTIC QUALITY INSPECTED 4

REPORT DOCUMENTATION PAGE

Form Approved
OMB No. 0704-0188

Public reporting burden for this collection of information is estimated to average 1 hour per response, including the time for reviewing instructions, searching existing data sources, gathering and maintaining the data needed, and completing and reviewing the collection of information. Send comments regarding this burden estimate or any other aspect of this collection of information, including suggestions for reducing this burden, to Washington Headquarters Services, Directorate for Information Operations and Reports, 1215 Jefferson Davis Highway, Suite 1204, Arlington, VA 22202-4302, and to the Office of Management and Budget, Paperwork Reduction Project (0704-0188), Washington, DC 20503.

1. AGENCY USE ONLY *(Leave blank)*

2. REPORT DATE
February 1996

3. REPORT TYPE AND DATES COVERED
Project Report 27, February 1996

4. TITLE AND SUBTITLE
Analysis of Interior Flood Damage Reduction Measures
Napa River, Napa, California

5. FUNDING NUMBERS
WU 33062

6. AUTHOR(S)
Harry W. Dotson
Hydraulic Engineer, Planning Analysis Division
Hydrologic Engineering Center

7. PERFORMING ORGANIZATION NAME(S) AND ADDRESS(ES)
Hydrologic Engineering Center
U.S. Army Corps of Engineers
609 Second Street
Davis, CA 95616-4687

8. PERFORMING ORGANIZATION REPORT NUMBER
PR-27

9. SPONSORING/MONITORING AGENCY NAME(S) AND ADDRESS(ES)
U.S. Army Corps of Engineer District, Sacramento
1325 J Street
Sacramento, CA 95814-2922

10. SPONSORING/MONITORING AGENCY REPORT NUMBER
N/A

11. SUPPLEMENTARY NOTES
The project study which this report documents was funded by the Sacramento District (CESPK) Corps of Engineers. CESPK provided basic data and guidance for the study.

12a. DISTRIBUTION/AVAILABILITY STATEMENT
Distribution of this document is unlimited.

12b. DISTRIBUTION CODE

13. ABSTRACT *(Maximum 200 words)*
This report presents part of the results of the hydrologic engineering analysis of interior flood damage reduction measures for the City of Napa, CA conducted by the Hydrologic Engineering Center (HEC) for the Sacramento District Corps of Engineers. The objective of the hydrologic engineering analysis was to determine: 1) the minimum outlet facility associated with the proposed line-of-protection; 2) the stage-frequency relationships for the without-project conditions; and 3) the stage-frequency relationships for a range of gravity outlet and pumping station sizes and configurations for the interior areas.

This report presents the results of applying the HEC-IFH program for evaluation of one of the several interior areas involved in the overall investigation. The report includes a description of 1) the study area, 2) the Napa River proposed flood damage reduction project, 3) interior area data and information, 4) without-project conditions analysis for minimum facility analysis 5) minimum facility analysis, and 6) stage-frequency for interior flood damage reduction plans.

14. SUBJECT TERMS
Napa River, Napa, CA, interior flooding, interior facilities, levee, flood protection, flood damage reduction, plan evaluation, pumping station, gravity outlet, interior ponding area

15. NUMBER OF PAGES
72

16. PRICE CODE

17. SECURITY CLASSIFICATION OF REPORT

18. SECURITY CLASSIFICATION OF THIS PAGE

19. SECURITY CLASSIFICATION OF ABSTRACT

20. LIMITATION OF ABSTRACT
UL

Analysis of Interior Flood Damage Reduction Measures Napa River, Napa, CA

February 1996

Hydrologic Engineering Center
U.S. Army Corps of Engineers
609 Second Street
Davis, CA 95616-4687

(916) 756-1104

PR-27

DTIC QUALITY INSPECTED 4

Table of Contents

1. Introduction 1

2. Description of the Study Area 1

3. Description of the Proposed Flood Damage Reduction Project 3
   a. Napa River and Napa Creek 3
   b. Interior Area Measures 3

4. Interior Area Data and Information Assembly 3
   a. General 3
   b. Rainfall Data 4
      (1) CSA 4
      (2) HEA 5
   c. Interior Area Characteristics. 5
      (1) General 5
      (2) Interior Ponding Areas 6
      (3) Existing Storm Sewer Configuration 8
         (a) General 8
         (b) Interior Area 1 9
         (c) Interior Area 2 9
         (d) Interior Area 3 10
         (e) Interior Area 4 10
         (f) Interior Area 5 11
         (g) Interior Area 6 12
   d. Runoff Characteristics 12
      (1) Unit Hydrographs 12
      (2) Loss Rates 13
         (a) CSA 13
         (b) HEA 13
      (3) Base flow 15
      (4) Streamflow Routing 15
      (5) Interior Runoff Computation Time Interval (Δt) 15
   e. Exterior Stage Data 15
      (1) Exterior Conditions - CSA 15
      (2) Exterior Conditions - HEA 17
   f. Field Reconnaissance 17
   g. Gravity Outlets 18
   h. Pumping Stations 19
   i. Auxiliary Flow 20
   j. Water Surface Profile Data 22
   k. Stage-Damage Relationships 22

5. Without-project Conditions Analysis for Minimum Facility Evaluation 23
a. General 23
b. Napa River Flooding Without Line-of-Protection 23
c. Local Runoff Flooding Without Line-of-Protection 23
d. Assess Future Without Project Conditions Impacts 24

6. Minimum Facility Analysis 24
a. General 24
b. Selecting the Minimum Facility. 24
c. Without Project Condition Stage-Frequency Relationship with the Minimum Facility in Place 28

7. Stage-Frequency for Interior Flood Damage Reduction Plans 39
a. General 39
b. Evaluation of Additional Gravity Outlet Capacity 39
c. Determine Stage-Frequency for Added Pumping Capacity 41
(1) General 41
(2) Base condition 41
d. Nonstructural Measures 41
e. Final Plan Selection 42

Figures

1. Napa River Basin 2
2. Interior Area Composite Historical Precipitation Data 4
3. Interior Area Hypothetical Precipitation Data 5
4. Interior Pond Elevation-Area-Storage Relationship for Area 5 8
5. Precipitation, Loss and Loss Percent for Interior Area 5 - CSA 13
6. Runoff Parameters - Area 5 Lower Subbasin, CSA 14
7. Interior Runoff Discharge-Frequency Relationships - CSA and HEA 14
8. Runoff Parameters for the Exterior Basin - CSA 16
9. Exterior Stage Hydrograph Napa River Upstream of Napa Creek - CSA 16
10. Portion of Hypothetical Flood Hydrographs for Exterior Basin - HEA 17
11. Hypothetical Flood Hydrographs for Exterior Basin - HEA 18
12. Pump Unit Head-Capacity-Efficiency Data 19
13. Pumping Station Data for Interior Area 5 20
14. Diversion Rate for the Upper Subbasin - Interior Area 5 21
15. Auxiliary Flow Components for Interior Area 1 - HEA 21
16. Exterior Rating Curve for Interior Area 5 22
17. Exterior Stage Transfer Relationships for Area 5 23
18. Plan Components, Minimum Facility - HEA, Unblocked 25
19. Stage-Frequency for Minimum Facility - Area 5, HEA, Unblocked 26
20. Stage-Frequency Relationships - HEA Unblocked and Interior/Exterior 28
21. Interior Elevation-, Area Flooded-, Inflow-Frequency with Minimum Facility - Area 1 29
22. Interior Elevation-Frequency with Minimum Facility - Area 1 29
23. Interior Elevation-, Area Flooded-, Inflow-Frequency with Minimum Facility - Area 2A 30
24. Interior Elevation-Frequency with Minimum Facility - Area 2A 30
25. Interior Elevation-, Area Flooded-, Inflow-Frequency with Minimum Facility - Area 2B 31
26. Interior Elevation-Frequency with Minimum Facility - Area 2B 31

27. Interior Elevation-, Area Flooded-, Inflow-Frequency with Minimum Facility - Area 3 32
28. Interior Elevation-Frequency with Minimum Facility - Area 3 32
29. Interior Elevation-, Area Flooded-, Inflow-Frequency with Minimum Facility - Area 4A 33
30. Interior Elevation-Frequency with Minimum Facility - Area 4A 33
31. Interior Elevation-, Area Flooded-, Inflow-Frequency with Minimum Facility - Area 4B 34
32. Interior Elevation-Frequency with Minimum Facility - Area 4B 34
33. Interior Elevation-, Area Flooded-, Inflow-Frequency with Minimum Facility - Area 5 35
34. Interior Elevation-Frequency with Minimum Facility - Area 5 35
35. Interior Elevation-, Area Flooded-, Inflow-Frequency with Minimum Facility - Area 6 36
36. Interior Elevation-Frequency with Minimum Facility - Area 6 36
37. Interior and Exterior Elevation - February 1986, CSA 37
38. Interior and Exterior Stages - January 1973 Event, CSA 38
39. Interior Stage-Frequency Relationships for CSA and HEA - Area 5 38
40. Summary of Plans for Evaluating Outlet Capacity - HEA 40
41. Stage-Frequency Relationships for Range of Gravity Outlet Sizes 40
42. HEA Plans for Evaluating Pumping Capacity 41
43. Stage-Frequency Relationship for Evaluating Pumping Capacity 42

Tables

1. Napa Interior Area Characteristics 6
2. Interior Area Pond Elevation - Area - Storage Relationships 7
3. Stages for Determining the Minimum Facility for Interior Area 26
4. Napa Interior Flood Hydrology Recommended Minimum Facilities 27

HEC PROJECT REPORT NO. 27

Analysis of Interior Flood Damage Reduction Measures Napa River, Napa, California

1. Introduction

This report presents part of the results of the hydrologic engineering analysis of interior flood damage reduction measures for the City of Napa, CA conducted by the Hydrologic Engineering Center (HEC) for the Sacramento District Corps of Engineers. The objective of the hydrologic engineering analysis was to determine: 1) the minimum outlet facility associated with the proposed line-of-protection; 2) the stage-frequency relationships for the without-project conditions; and 3) the stage-frequency relationships for a range of gravity outlet and pumping station sizes and configurations for the interior areas.

This report presents the results of applying the HEC-IFH program for evaluation of one of the several interior areas involved in the overall investigation. The report includes a description of 1) the study area, 2) the Napa River proposed flood damage reduction project, 3) interior area data and information, 4) without-project conditions analysis for minimum facility analysis 5) minimum facility analysis, and 6) stage-frequency for interior flood damage reduction plans. The Sacramento District was responsible for developing data for the without-project conditions, including stage-damage relationships, cost estimates of the flood damage reduction measures, and other data required to do the economic analysis of each plan. The design requirements for conveyance systems, inlet and outlet works, and the economic analyses of project components are beyond the scope of the report presented herein.

2. Description of the Study Area

The Napa River basin is located about 50 miles north of San Francisco, CA. The basin is about 50 miles long on a north-south axis, varies between five and ten miles in width, and has a drainage area of about 426 square miles. (See Figure 1.) The north, east and west limits of the basin are formed by portions of the north coast mountain range. The southern limit is bounded by the San Pablo Bay.

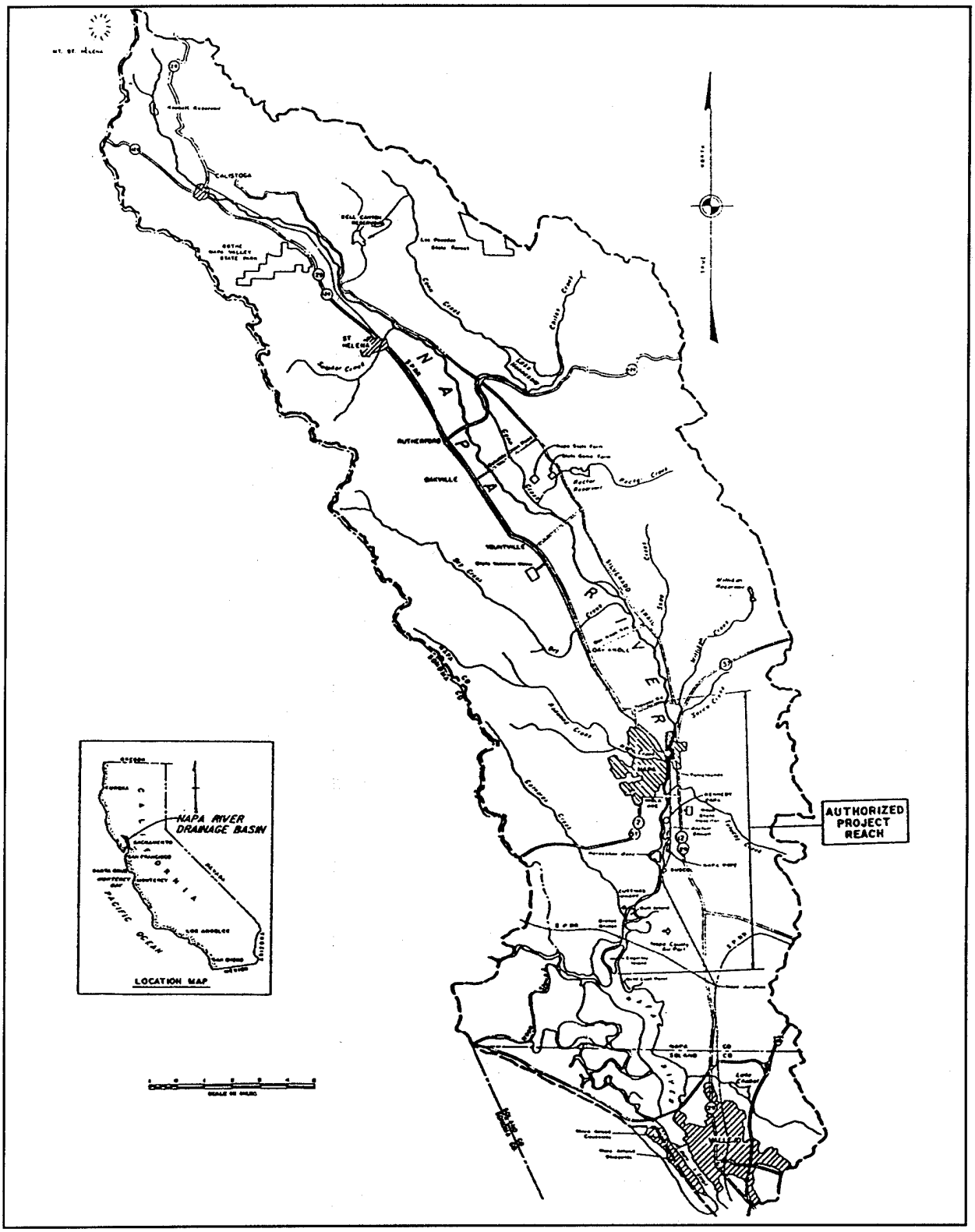

Figure 1. Napa River Basin

The Napa River originates near Mount St. Helena and empties into the Mare Island strait, which flows into the tidal marshlands and sloughs of San Pablo Bay. The city of Napa, CA is located in the lower third of the basin and has a population of about 60,000. Basin land use consists mainly of vineyards in the valley area north of the City of Napa and limited mixed use in the marshlands and reclaimed tidal lands south of the city.

3. Description of the Proposed Flood Damage Reduction Project

a. Napa River and Napa Creek. The current recommended plan for the City of Napa, CA provides for protection against the one-percent chance event from the Napa River and Napa Creek. The proposed plan consists of channel excavation, sheetpile walls, concrete flood walls, set-back earthen levees, a bypass channel, and related environmental mitigation measures.

b. Interior Area Measures. The interior flood damage reduction measures will consist of replacing approximately twenty-one existing storm sewers in six identified interior areas with minimum gravity outlets through the Napa River planned line-of-protection. Additional outlet capacity by gravity or pumps will be provided where economically justified. The proposed improvements for Napa Creek consist of channel excavation only and therefore, will not include interior measures. This report describes the analysis of interior measures for the six interior areas.

4. Interior Area Data and Information Assembly

a. General. Hydrologic data and other information required for the analysis of the interior area were assembled. This includes data for both the interior and exterior (Napa River) areas. The information is applicable for any analytical method, but was specifically targeted for application of the HEC-IFH computer program. Appropriate information was assembled to permit analyses using continuous simulation analysis (CSA) with period-of-record historical data and hypothetical event analysis (HEA) with synthetic storm event data.

CSA is attractive because it preserves the relationship between Napa River stages at interior outlet locations and interior area runoff. A drawback of CSA is the difficulty of defining rare flood events when only a relatively short historical period-of-record is available, as is the case for the Napa area. Both CSA and HEA were used in this investigation. CSA was used to evaluate the concurrence of interior and exterior stages and to help substantiate the reasonableness of the results. HEA was used to develop the final adopted stage-frequency relationships because of the historically evident dependance of interior runoff and high exterior stages and to define the full range of flood events. Hydrologic data and other required information are described in the same manner as an analyst would assemble and enter the data into the HEC-IFH

program. Data sets and module information are shown by including representative program screens as figures, where appropriate.

b. Rainfall Data. Historical rainfall records were assembled for continuous simulation analysis (CSA) and hypothetical depth-duration-frequency relationships were developed for hypothetical event analysis (HEA).

(1) CSA. Historical rainfall records of nearby recording rain gages were used to develop a continuous period-of-record rainfall record for Napa River interior areas. Recorded hourly incremental rainfall at the Atlas Road gage was adjusted by the ratio of mean annual precipitation (MAP) for the Napa River interior area (26.0 inches) to that at the Atlas Road gage (38.0 inches). Prior to applying the ratio, missing data at the Atlas Road gage was filled in by Oakville 4SW gage data using the appropriate MAP ratio. A composite precipitation record for Water Year (WY) 1949 through WY 1989 was determined in this manner for use in CSA. The computed composite record was written to HEC-DSS and then imported into the HEC-IFH program. After importing the composite record, incremental rainfall can be plotted on a yearly, monthly, or daily basis. Figure 2 shows total daily precipitation for WY 1986.

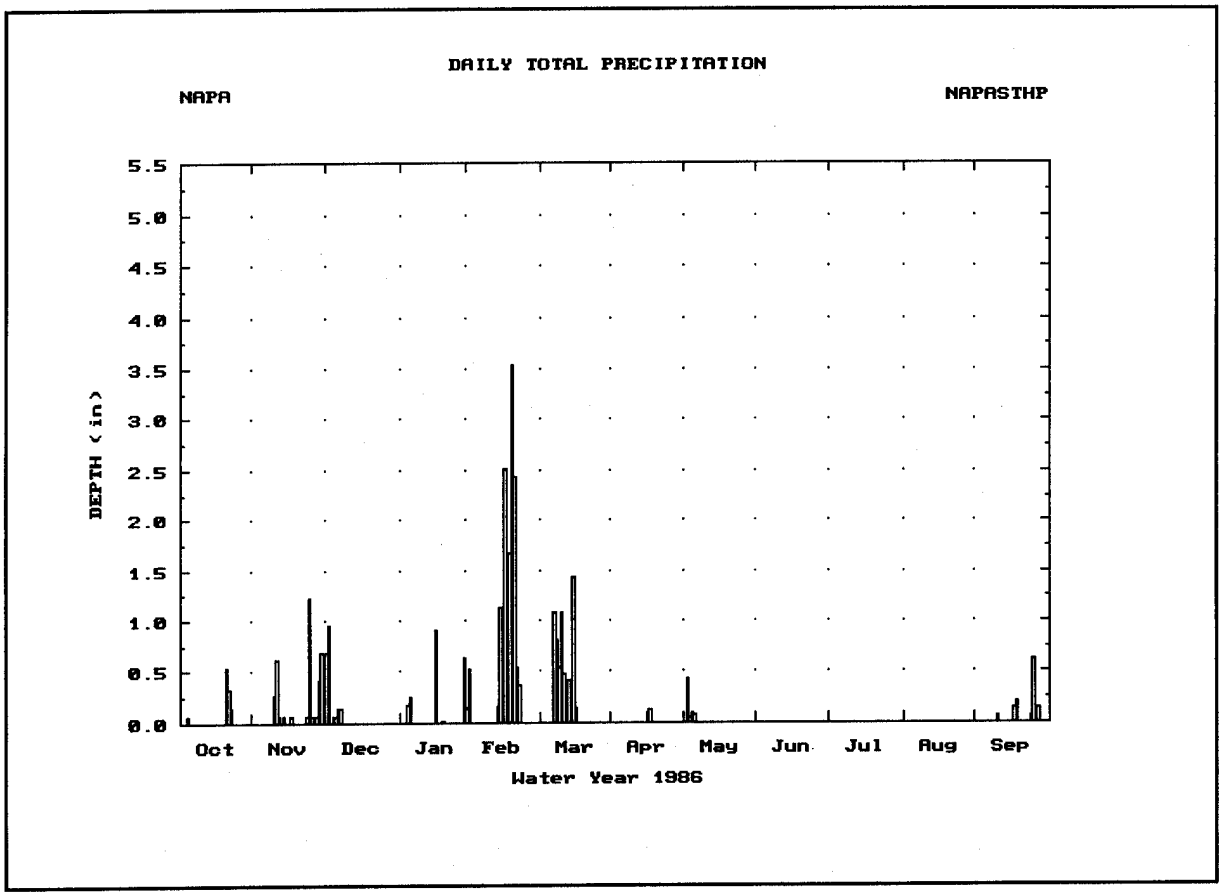

Figure 2. Interior Area Composite Historical Precipitation Data

(2) HEA. Hypothetical frequency storm depth-duration-frequency relationships for general rain and local storms were developed from rainfall frequency data that was available for the Martinez 3S and Napa State Hospital gages. Depths were adjusted by ratios of the mean annual precipitation (MAP) for the gages and the MAP for the Napa River interior area estimated from a MAP isohyetal map. The adopted depth-duration-frequency rainfall relationships for a general rain storm are shown in Figure 3. The development of precipitation data for computing exterior period-of-record discharge hydrographs is described in Section 4,f., Exterior Stage Data.

HEC-IFH

HEA 01.04.00
Study ID NAPA
Module ID PRECHLOC

Basin Average Precipitation (PRECIP)

Enter Partial-Duration Rainfall Depth-Duration-Frequency Data

Duration	Rainfall Depth (in) for each Hypothetical Event						
	50%	20%	10%	4%	2%	1%	0.2%
5 minutes	0.15	0.20	0.25	0.30	0.32	0.36	0.45
15 minutes	0.27	0.38	0.46	0.56	0.62	0.69	0.85
1 hour	0.57	0.80	0.97	1.16	1.30	1.44	1.78
2 hours	0.82	1.16	1.39	1.66	1.87	2.07	2.55
3 hours	1.02	1.42	1.70	2.04	2.29	2.54	3.14
6 hours	1.50	2.12	2.53	3.03	3.40	3.76	4.67
12 hours	1.98	2.79	3.33	4.00	4.48	4.96	6.15
24 hours	2.45	3.44	4.12	4.95	5.56	6.14	7.60
2 days	3.12	4.51	5.42	6.63	7.49	8.33	10.48
4 days	4.03	5.77	6.94	8.38	9.44	10.45	13.01
7 days	0.00	0.00	0.00	0.00	0.00	0.00	0.00
10 days	0.00	0.00	0.00	0.00	0.00	0.00	0.00

1Help 2PrtScr 3 4 5 6DOS 7 8 9 10Exit

Press <F10> to Save Data and Continue

Figure 3. Interior Area Hypothetical Precipitation Data

c. Interior Area Characteristics.

(1) General. Interior areas were delineated based on alignment of the line-of-protection, minimum facility requirements, runoff topology, topography of local ponding areas, present and potential future storm sewer and water collector/conveyance systems. Table 1 shows the characteristics of the six interior areas including area location, size, imperviousness, and Clark unit hydrograph parameters. Runoff parameters and the existing storm sewer layout are described in subsequent sections.

Table 1. Napa Interior Area Characteristics

Area	Location	Drainage Area (Sq. Mi.)	Percent Imp	Clark UHG Parameters (Hrs)	
				TC	R
Area 1	W. Bank, Ash to Imola				
Upper		0.28	20	0.61	0.17
Lower		0.50	20	0.95	0.26
Area 2	E. Bank, Tulucay Cr to Third St.				
2A	E. Bank, Tulucay Cr to Oil Co. Rd.	0.53	10	0.74	0.85
2B	E. Bank, Oil Co. Rd. to Third St.	0.19	10	0.39	0.20
Area 3	W. Bank, Ash to Napa Cr.	0.56	20	0.71	0.35
Area 4	E. Bank, Third to U/S Limit				
4A	E. Bank, Third to Berna St.	0.26	20	0.52	0.17
4B	E. Bank, Berna St. to U/S Limit	0.18	20	0.39	0.36
Area 5	W. Bank, Napa Cr to N. of Trancas St.				
Upper		1.28	20	0.79	0.98
Lower		1.26	20	1.10	0.40
Area 6	Btw Bypass and Napa R. Oxbow	0.04	5	0.25	0.12

(2) Interior Ponding Areas. Elevation-area relationships were delineated for each ponding area adjacent to the line-of-protection at the flow concentration points. The relationships were taken from elevation-area tables generated from computerized topographic data of the project area. The elevation-area data were entered into the HEC-IFH program which automatically generates the storage values from end-area approximations. The minimum value for each ponding area was established from the lowest invert elevation in the interior area. The maximum value is the highest interior stage anticipated in the analysis, which in this case is the top of the levee embankment at the line-of-protection. Tabulations of pond elevation-area-storage relationships for all of the interior areas are included in Table 2. A portion of the pond elevation-area-storage relationship for interior Area 5, as implemented in the HEC-IFH program, is shown in Figure 4.

Table 2. Interior Area Pond Elevation - Area - Storage Relationships

Pond Elev (FT)	Area (AC)	Storage (AC-FT)
Area 1		
1.0	0.0	0.0
5.0	0.1	0.3
9.0	0.2	1.0
10.0	23.0	12.7
11.5	43.0	62.2
12.0	49.8	85.4
15.0	77.4	276.2
20.0	108.6	741.2
Area 2A		
5.4	0.0	0.0
8.0	19.5	25.3
10.0	37.8	82.6
12.0	115.1	235.5
14.0	183.3	533.9
16.0	208.0	925.2
18.0	213.5	1346.8
20.0	223.1	1783.3
Area 2B		
-2.0	0.0	0.0
5.2	0.2	0.9
8.0	0.5	1.9
10.0	6.0	8.4
12.0	38.3	52.7
14.0	85.0	176.0
16.0	100.1	361.1
18.0	110.2	571.4

Pond Elev (FT)	Area (AC)	Storage (AC-FT)
Area 3		
-2.0	0.0	0.0
8.5	0.2	1.3
10.0	0.9	2.1
11.4	12.0	11.1
12.0	19.7	20.6
13.0	35.0	48.0
14.0	57.3	94.1
15.0	71.6	158.5
15.3	75.0	180.5
Area 4A		
0.4	0.0	0.0
5.0	0.1	0.3
11.5	0.1	1.1
12.5	0.1	1.2
14.0	0.4	1.6
14.2	0.4	1.7
16.0	28.7	27.9
18.0	40.2	96.8
Area 4B		
8.0	0.0	0.0
11.0	0.1	0.2
12.0	0.1	0.3
13.0	0.2	0.4
14.0	0.2	0.6
15.0	0.9	1.2
16.0	3.1	3.2
18.0	6.0	12.2

Pond Elev (FT)	Area (AC)	Storage (AC-FT)
Area 5		
-5.3	0.0	0.0
0.0	0.1	0.4
2.0	0.2	0.7
5.0	0.2	1.4
7.0	0.3	2.0
8.0	0.4	2.3
9.0	0.5	2.8
10.0	0.6	3.4
12.0	0.8	4.8
14.0	1.9	7.4
15.0	4.9	10.8
16.0	7.2	16.9
17.0	42.5	41.7
18.0	56.5	91.2
19.0	117.0	178.0
20.0	141.8	307.4
22.0	220.0	669.2
Area 6		
5.0	0.0	0.0
10.0	0.1	0.3
14.0	0.2	0.9
16.0	5.2	6.4
18.0	13.9	25.5
20.0	18.0	57.4

HEC-IFH

CSA 01.04.00
Study ID NAPA

Interior Pond (POND)

Enter Surface Areas for Computing Volumes

Storage Table ID AREA5

Description
Area 5 natural pond at Soscal Ave.

Pond Elevation (ft)	Surface Area (ac)	Storage Volume (ac-ft)
-5.30	0.0	0.0
0.00	0.1	0.4
2.00	0.2	0.7
5.00	0.2	1.4
7.00	0.3	2.0
8.00	0.4	2.3
9.00	0.5	2.8
10.00	0.6	3.4
12.00	0.8	4.8
14.00	1.9	7.4
15.00	4.9	10.8
16.00	7.2	16.9
17.00	42.5	41.7

1Help 2PrtScr 3 4 5 6DOS 7 8 9 10Exit

Press <F10> to Save Data and Return

Figure 4. Interior Pond Elevation-Area-Storage Relationship for Area 5

(3) Existing Storm Sewer Configuration.

(a) General. The details of existing and any proposed storm sewer layout, discharge design capacities, including elevation of the inverts, were required to define drainage areas, minimum facilities, gravity outlet inverts, pumping station on-off elevations, and design criteria for inlet and outlet works. The layout and design of existing and proposed future storm runoff conveyance systems were obtained from the Napa Public Works Department. The information provided included storm sewer location, length, size, and invert elevation. These data were provided on a 1 inch equal 100 feet scale areal photo, with 2-foot contour intervals.

Interior area surface runoff characteristics and existing storm water facilities that convey runoff through the line-of-protection, and into or out of the protected area are described in the following paragraphs. Outlet location designations were assigned to each existing outlet and indicate the interior area in which they are located and whether they area primary or secondary outlet locations. Primary outlets are located at the ponding area invert and secondary outlets are common to the same ponding area but are located either upstream or downstream of the primary location. An outlet location designation of 5.0 means that the outlet is located in Area 5 and it is the primary (".0") location for this area. A location designation of 3.3 means that it is in Area 3 and it is the third secondary outlet in this area. It was assumed in the analysis that all outlets in an interior area are common to one ponding area and that the storm sewers are

hydraulically connected unless specifically stated otherwise. Plates 1 through 30, which are refereed to in the following paragraphs, include interior area maps and outlet configuration drawings that use these location designations and show the location and characteristics of existing and recommended replacement outlets for each location.

(b) Interior Area 1. Area 1 is located on the right bank of Napa River just upstream of the mouth of Napa Creek. (See Plate 1.) This 0.78 square mile area is bounded by Napa River on the east, partially by Highway 29 on the west, Third St. on the north, and Imola Avenue on the south. The area was divided into an upper and lower portion to accommodate the area's surface runoff characteristics. The upper area consists of that portion of the area (0.28 Sq. Mi.) that lies west of Highway 29. This area drains east toward the highway where a double 2 ft. X 5 ft. box culvert passes under the embankment. Surface runoff that exceeds the capacity of this culvert (125 cfs) flows out of the area south along the highway and does not affect the project interior area. This condition was modeled in the HEC-IFH program by diverting runoff from the upper area greater than 125 cfs.

The lower subarea consists of the portion of Area 1 east of Highway 29 that drains in a southeasterly direction to Imola Ave. The area has two existing gravity outlets that cross the line-of-protection and convey storm runoff to the Napa River. The outlets consist of a 30-inch culvert at Imola Ave. and a 54-inch culvert at Coombs St. and are designated as 1.0 (primary location) and 1.1 (secondary location), respectively. The locations and recommended minimum facilities at these locations are shown on Plates 2 and 3. When the interior elevation reaches 11.5 ft., surface runoff overflows Imola Ave. and flows south out of the interior area. This situation was accounted for by specifying an overflow rating for the lower subarea.

(c) Interior Area 2. Area 2 is located on the left bank of Napa River. This 0.72 square mile area is bounded by Napa River on the west, high ground on the east, approximately Third St. on the north, and Tulucay Creek on the south. (See Plate 4.) This area was divided into two separate areas to accommodate overland flow patterns and two ponding areas. Area 2A includes the portion of Area 2 between Tulucay Creek and Oil Company Road. Surface runoff collects in the low area against the right bank existing Tulucay Creek levee. The existing levee has been breached to prevent ponding and flooding in this area. The levee will be closed and become part of the line-of-protection, and therefore, a new gravity outlet will be required at this location. A 4 ft. X 4 ft. box culvert is the recommended minimum facility. (See Plate 5.)

Area 2B is the portion of Area 2 that lies between approximately Third Street and Oil Company Rd. The area has three existing gravity outlets that cross the line-of-protection and convey storm runoff to the Napa River. See Plates 6 through 8 for the location of the primary and secondary outlets and the recommended minimum facilities. Surface runoff from Area 2B overflows Oil Company RD above elevation 11.0 ft. and flows into Area 2A. This condition was simulated by specifying an overflow from Area 2B and an identical auxiliary inflow for Area 2A.

(d) Interior Area 3. Area 3 is located on the right bank of Napa River just downstream of Napa Creek. (See Plate 9.) This 0.56 square mile area is bounded by Napa River on the east, Highway 29 on the west, Napa Creek on the north, and Area 1 on the south. The area has seven existing gravity outlets that cross the line-of-protection and convey storm runoff to the Napa River. The existing 12-inch and 30-inch culverts at Oak St. and the 30-inch culvert at Laural St. were combined as one 48-inch culvert at Laural St. for analysis. This was done to reduce the number of secondary locations to four, which the maximum number that can be specified for one ponding area when using the HEC-IFH program. See Plates 10 through 15 for the location of the primary and secondary outlets and the recommended minimum facilities for Area 3. Numbered outlets refer to the primary and secondary outlet locations, as shown in the Plates. Surface runoff from this area overflows into Area 1 near Ash St. above elevation 11.4 ft. This condition was simulated by specifying an overflow from Area 3 and an identical auxiliary inflow for Area 1.

(e) Interior Area 4. Area 4 is located on the left bank of Napa River. This 0.44 square mile area is bounded by Napa River on the west, high ground on the east approximately Summit Ave. (upstream project limits) on the north, and Area 2B on the south. (See Plate 16.) This area was divided into two parts to accommodate overland flow patterns and two separate ponding areas. The division between Area 4A and 4B is approximately East Street in the middle portion and the existing ditch at the lower end of Berna Ave. at Napa River.

Area 4A consists of the southern portion of Area 4 between Berna Ave. and Third Street. The area has six existing gravity outlets that cross the line-of-protection and convey storm runoff to the Napa River. The existing 12-inch culvert at Post St. and the existing 24-inch culvert at Second Street were combined and analyzed as a double 24-inch culvert at Second St. The existing 18-inch culvert at First St. and the existing 10-inch culvert at Clay St. were combined and analyzed as a double 24-inch culvert at Clay St. This was done to reduce the number of secondary outlet locations for this area. See Plates 17 through 22 for the location of the primary and secondary outlets and the recommended minimum facilities for Area 4A. Numbered outlets refer to the primary and secondary outlet locations, as shown in the Plates.

It was assumed in the analysis that all outlets are common to one ponding area and that the storm sewers are hydraulically connected. The exception to this was the southern most portion of the area (location designation 4.99), where an existing 18-inch culvert passes through the line-of-protection on the south side of Third St. Runoff from this, very small portion of the area does not reach the other storm sewers north of Third St., and therefore, this outlet was not analyzed as part of Area 4A. It is recommended that this outlet be replaced by a 24-inch culvert, which will be more than adequate to handle the runoff from this small area (about 17 acres or 0.03 sq. mi.). Surface runoff from this area overflows into Area 2B near Third St. above elevation 14.2 ft. This condition was simulated by specifying an overflow from Area 4A and an identical auxiliary inflow for Area 2B.

Area 4B is the portion of Area 4 that lies between approximately Berna Ave. on the south and high ground on the north. Runoff from the area flows south and west from higher ground and concentrates in an existing ditch at the lower end of Berna Ave. No existing gravity outlets cross the line-of-protection in area 4B. See Plate 23 for the location of the single outlet recommended minimum facility for this area. Surface runoff from Area 4B overflows to the south above elevation 15.3.0 ft. and flows into Area 4A. This condition was simulated by specifying an overflow from Area 4B and an identical corresponding auxiliary inflow for Area 4A.

(f) Interior Area 5. Interior Area 5 is located on the right bank of Napa River just upstream of the mouth of Napa Creek. (See Plate 24.) This 2.5 square mile area is bounded by Napa River on the east, Highway 29 on the west, approximately Trancas St. on the north, and Napa Creek on the south. The area was divided into an upper and lower portion to accommodate the previously developed HEC-1 basin model. Runoff parameters and the existing storm sewer layout are described in subsequent sections. Area 5 is well sewered and has several existing gravity outlets that cross the line-of-protection and/or convey portions of the runoff to the Napa River. The outlets are shown on Plates 25 through 28 and are described in the following subparagraphs. Numbered outlets refer to the primary and secondary outlet locations as shown in the Plate.

- 54-inch Pipe at Trancas St. A major storm sewer system runs easterly along Trancas Street and discharges into the Napa River via a 54 inch circular pipe just downstream of the Trancas Street Bridge. This outfall is above the upstream limit of the project and therefore will not be disturbed. The outlet invert is not subject to blockage from high river stages due to the relatively high outlet invert elevation. It was estimated by the City of Napa that this outfall would pass a maximum of 50 CFS into the Napa River during flooding. This was simulated in the HEC-IFH program by diverting this flow from the upper subbasin to the river. (See the subsequent section on Auxiliary Flow.)

- 72-inch Pipe near Soscol and Pueblo Sts. Intersection. The next downstream major storm sewer is a 72 inch circular pipe which enters the river at the north end of the Lake Park leveed area just east of the intersection Soscol and Pueblo Sts. It serves a major portion of the upper subbasin under pressure flow. This outlet is just upstream of the upper limits of the flood control project and therefore, will be left undisturbed. The capacity of this pipe was estimated to be 300 CFS and this flow was diverted from the upper subbasin to the river for HEA and CSA. (See the subsequent section on Auxiliary Flow.)

- Lake Park/Edgewater Area. This area and its associated existing gravity outlets and pump station are separated from Area 5 by an existing levee on the north, east, and south, and Soscol Ave. on the west, and therefore, are not part of the interior Area 5 analysis. The existing interior facilities will not be disturbed or the contributing area changed by the proposed Napa River project. The City of Napa has evaluated these facilities and considers them adequate for the area served.

- Location 5.0. Existing facilities include a 72 pipe that empties into an overflow ditch that enters the Napa River just upstream of the confluence of Napa Creek and Napa River. At the outfall there is a 42 inch circular pipe that runs beneath the overflow ditch. This outfall location is the flow concentration point for Area 5 and was designated as the primary gravity outlet location for this interior area. (See Plate 25.)

There are 3 additional existing outlets that cross the line-of-protection and are to be replaced with new gravity outlets with drop inlets . They are all upstream of the primary gravity outlet and are designated and analyzed as secondary outlets for HEA and CSA. These outlets are shown on Plates 26 through 28 and described below:

- Location 5.1. 1-24 inch pipe located at Imperial way

- Location 5.2. 1-18 inch pipe located at North Bay Drive (to be replaced by a 24 inch drop inlet)

- Location 5.3. 1-30 inch pipe located at Lincoln Avenue.

There are a few small outlets that convey a minor portion of interior runoff from Area 5 into Napa Creek from the left bank (north side). These outlets will not be cut off by the project since they are upstream of the Napa River tie back levee were channel excavation is the only project feature. The effect of these outlets were considered to be negligible in the analysis of Area 5.

(g) Interior Area 6. Area 6 consists of the 0.04 sq. mi. area in the oxbow portion of the Napa River that will be cut off by the planned project bypass channel. (See Plate 29.) The area has one existing gravity outlet that crosses the line-of-protection and conveys storm runoff to the Napa River. (See Plate 30.)

d. Runoff Characteristics.

(1) Unit Hydrographs. The Sacramento District developed an HEC-1 rainfall-runoff model for simulating historical flood events for Napa River interior areas during previous studies. The HEC-1 model used the kinematic wave technique of transforming rainfall to runoff. The HEC-IFH program does not use kinematic wave and therefore it was not possible to reproduce the modeling effort in HEC-IFH. It was important to preserve the timing of the interior runoff and the detail of the HEC-1 model where interior areas were divided into many subareas and reaches to represent urban runoff. Therefore, the kinematic wave HEC-1 model was used with one-inch of runoff to generate composite unit hydrographs for each interior area. Clark unit hydrograph parameters TC and R were estimated from the kinematic wave unit hydrographs using the parameter estimation capability in the HEC-1 program. These unit hydrograph parameters were used in the HEC-IFH program for computing runoff from the interior area during hypothetical event and continuous simulation analysis.

(2) Loss Rates. The initial and uniform loss rate model was used for both CSA and HEA. There are no stream gages in the interior area so a calibration of runoff parameters was not possible. Other methods were used to insure the reasonableness of the parameters as described below.

(a) CSA. For CSA, the initial loss was 0.4 inches and the uniform loss was 0.02 inches per hour. The monthly initial loss recovery rate for CSA was 0.04 inches per day, allowing the initial loss to recover completely after 10 days. Test simulations with different initial loss recovery rates for CSA showed that peak interior runoff was not sensitive to this parameter. Examination of monthly precipitation, loss, and percent loss is possible in HEC-IFH and helps verify the reasonableness of selected loss rates. (See Figure 5.) Figure 6 shows typical CSA runoff parameters as implemented in the HEC-IFH program. The monthly precipitation, losses, and percent losses are reasonable for this area.

HEC-IFH

CSA 01.04.00
Study ID NAPA
Plan ID PLAN5-3A

Hydrologic Analysis Summaries

Begin 01OCT1948/0015
End 30SEP1989/2400

K. Monthly Summaries - Average Monthly Rainfall

Month	Lower Sub-Basin			Upper Sub-Basin			Exterior Basin		
	Precip (in)	Losses (in)	Percent Loss	Precip (in)	Losses (in)	Percent Loss	Precip (in)	Losses (in)	Percent Loss
Oct	1.28	0.49	38.25	1.28	0.49	38.25			
Nov	3.37	1.09	32.30	3.37	1.09	32.30			
Dec	4.38	1.34	30.60	4.38	1.34	30.60			
Jan	5.02	1.47	29.21	5.02	1.47	29.21			
Feb	3.96	1.17	29.53	3.96	1.17	29.53			
Mar	3.43	1.20	34.90	3.43	1.20	34.90			
Apr	1.72	0.70	40.89	1.72	0.70	40.89			
May	0.41	0.25	61.46	0.41	0.25	61.46			
Jun	0.16	0.10	59.73	0.16	0.10	59.73			
Jul	0.06	0.03	43.31	0.06	0.03	43.31			
Aug	0.06	0.04	67.54	0.06	0.04	67.54			
Sep	0.38	0.19	49.00	0.38	0.19	49.00			

1Help 2PrtScr 3 4 5 6DOS 7 8 9Plot 10Exit
Press <F10> to Return

Figure 5. Precipitation, Loss and Loss Percent for Interior Area 5 - CSA

(b) HEA. For HEA the adopted initial loss was 0.2 inches and the uniform loss was 0.02 inches per hour. These loss rates were held constant for all hypothetical events. The loss rates were consistent with those used by the district had in previous studies and were considered reasonable for the highly urbanized areas. As expected, the HEA loss rates, which represent rare single events, are lower than the CSA rates. Peak interior runoff using the described adopted loss rate parameters were compared for CSA and HEA. Peak interior flow-frequency relationships for CSA and HEA are shown in Figure 7.

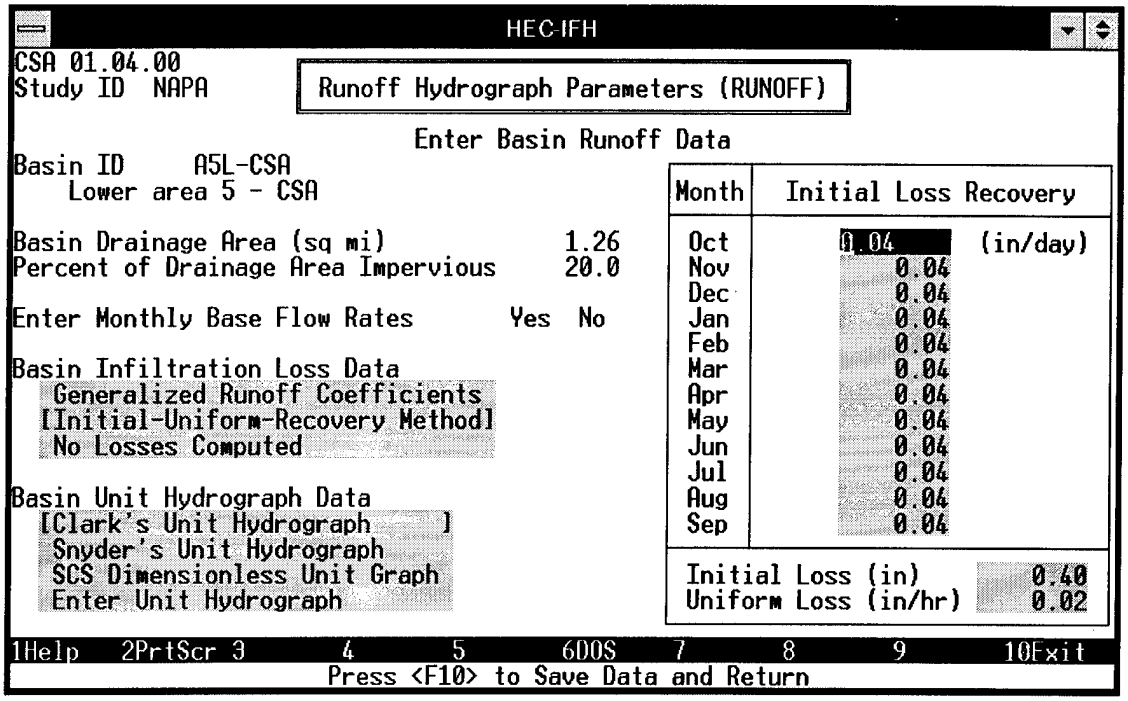

Figure 6. Runoff Parameters - Area 5 Lower Subbasin, CSA

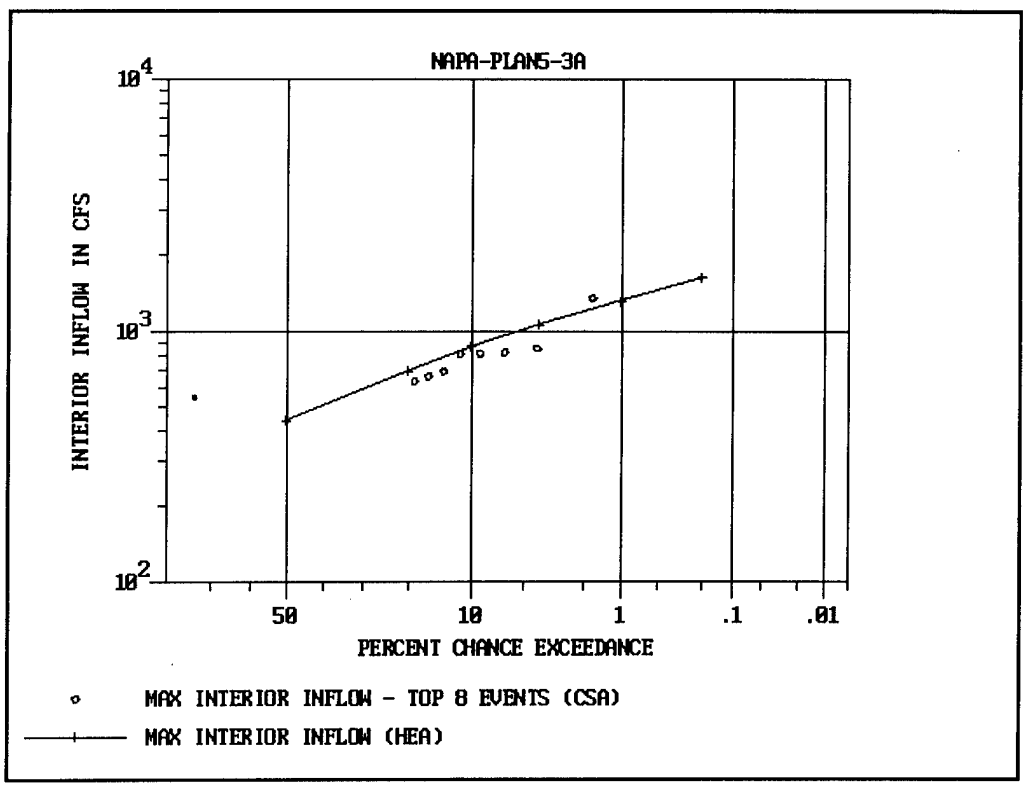

Figure 7. Interior Runoff Discharge-Frequency Relationships - CSA and HEA

The HEA generated curve matched the eight largest historical peaks shown closely. This further substantiates the reasonableness of adopted runoff parameters.

(3) Base flow. No base flow was specified for either CSA or HEA. Base flow was considered to have little impact on peak runoff or volume for these small interior areas.

(4) Streamflow Routing. No routing was used between the upper and lower subareas for any of the defined interior areas due to the short travel time and the fact that the areas are heavily sewered.

(5) Interior Runoff Computation Time Interval (Δt). The interior runoff computation time was 15 min. for CSA and 5 min. for HEA. The shortest Clark TC for the interior subareas is 0.25 hr. Accordingly, the 5 min. time interval for HEA was considered adequate to define the runoff hydrographs at the outlets and resultant, adopted stage-frequency relationships.

e. Exterior Stage Data. Exterior stage hydrographs were required to establish the exterior conditions for both CSA and HEA. The development of exterior conditions is described in the following paragraphs.

(1) Exterior Conditions - CSA. Exterior stage data for period-of-record CSA include continuous stage hydrographs that represent the historic patterns of Napa River discharge at the outlet locations of each interior area. A continuous discharge hydrograph was developed for the exterior from rainfall-runoff analysis. Historical rainfall records of nearby recording and nonrecording rain gages were used with the PRECIP program to develop a continuous, period-of-record, composite rainfall record for the Napa River basin. Runoff parameters for the exterior basin were derived by calibration with the computed SPF hydrograph, the estimated peak discharge of the February 1986 flood event, and the project design discharge-frequency curve for Napa River below Tulucay Creek. The computed exterior runoff hydrographs were used with Napa River rating curves to determine continuous exterior stage hydrographs during CSA. The rating curves were defined at the outlet locations based on project channel water surface profiles provided by the district. Rating curves were adjusted slightly so that the peak flow of each hypothetical flood hydrograph matched the water surface elevation from the water surface profiles for the corresponding event. Figure 8 shows CSA runoff parameters used for the exterior basin and Figure 9 shows the rainfall-runoff generated stage hydrograph for February 1986 for Napa River above Napa Creek.

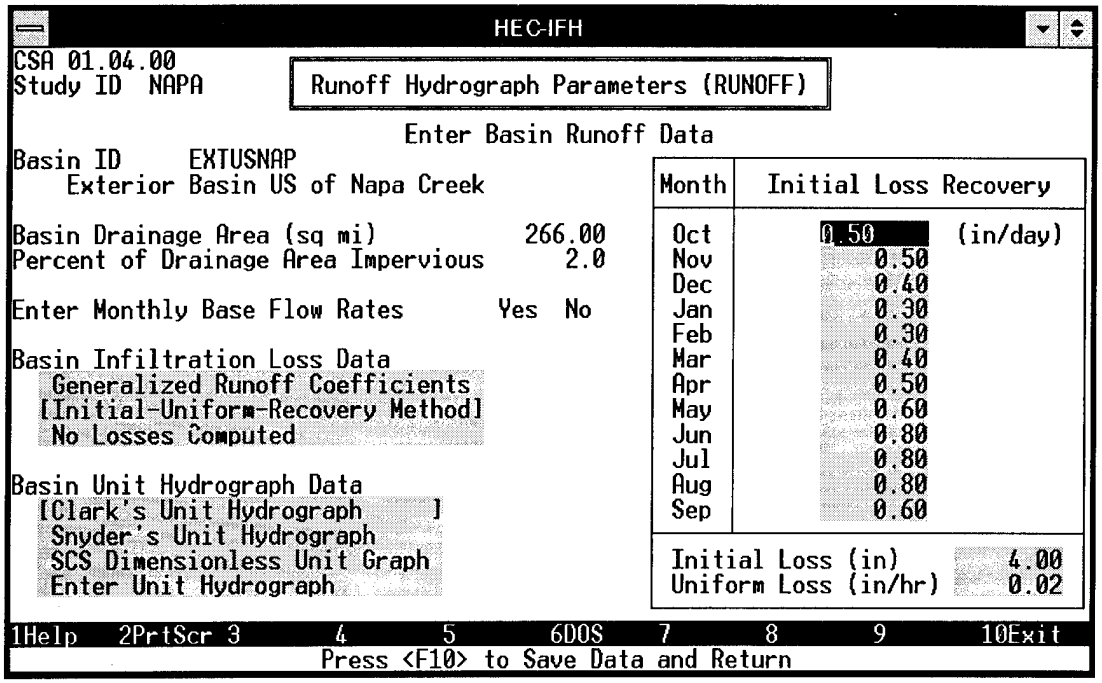

Figure 8. Runoff Parameters for the Exterior Basin - CSA

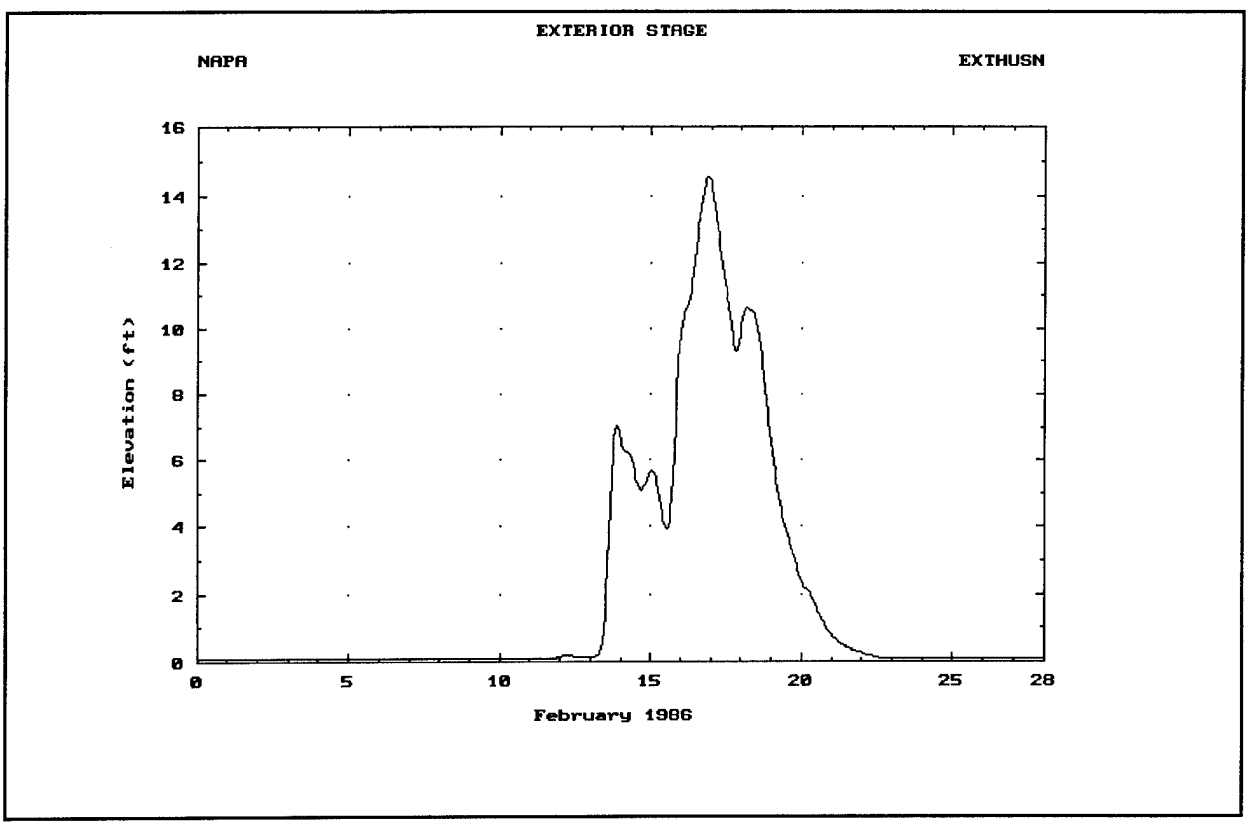

Figure 9. Exterior Stage Hydrograph Napa River Upstream of Napa Creek - CSA

(2) Exterior Conditions - HEA. Hypothetical storm analyses were conducted using general rain 96-hr local storms centered over the interior for unblocked, low Napa River conditions. For hypothetical interior and exterior analysis the general rain 96-hr hypothetical storms were centered over both the interior area and the Napa River basin. Hypothetical storm flood hydrographs at the outlet locations of each interior area were developed from HEC-1 data sets provided by the district. The data consists of a s-curve unit hydrograph rainfall-runoff model upstream of the Oak Knoll stream gage and a kinematic wave model downstream to Imola Avenue in Napa. The hydrographs were determined by taking ratios of the SPF. These HEC-1 rainfall-runoff models were used by the district to develop project discharge-frequency relationships for the Napa River. Therefore, the HEC-1 model hypothetical flood hydrographs were used for exterior conditions during HEA. The flood hydrographs were imported into the HEC-IFH program and used with rating curves to compute exterior stage hydrographs at interior outlet locations during HEA. Figure 10 and 11 show the imported hypothetical flood hydrographs for the exterior basin (Napa River) upstream of Napa Creek.

HEA 01.04.00
Study ID NAPA
Module ID EXHYPUSN

Exterior Stage (EXSTAGE)

Index Location

Enter/Import Exterior Discharge Hydrographs (cfs)

Time Interval 15MIN

Number of Intervals 800

Da/HrMn	Hyp.Frq 50%	Hyp.Frq 20%	Hyp.Frq 10%	Hyp.Frq 4%	Hyp.Frq 2%	Hyp.Frq 1%	Hyp.Frq 0.2%	SPF
1/0015	81.	113.	139.	167.	191.	216.	296.	0.
1/0030	81.	112.	139.	167.	191.	216.	296.	0.
1/0045	81.	112.	139.	167.	191.	216.	296.	0.
1/0100	81.	112.	139.	167.	190.	216.	295.	0.
1/0115	81.	113.	139.	167.	191.	216.	296.	0.
1/0130	81.	113.	140.	168.	192.	217.	297.	0.
1/0145	82.	115.	141.	170.	194.	219.	301.	0.
1/0200	84.	117.	144.	173.	197.	223.	309.	0.
1/0215	86.	120.	147.	177.	202.	229.	322.	0.
1/0230	89.	124.	152.	183.	209.	237.	343.	0.
1/0245	92.	128.	158.	190.	217.	248.	370.	0.
1/0300	95.	134.	164.	199.	228.	261.	421.	0.
1/0315	100.	140.	172.	208.	240.	276.	471.	0.

1Help 2PrtScr 3 4 5 6DOS 7 8 9 10Exit

Position with <PgDn>, <PgUp>, <Dn>, <Up>, <Home>, <End>

Figure 10. Portion of Hypothetical Flood Hydrographs for Exterior Basin - HEA

f. Field Reconnaissance. Two field trips were made to locate outlet inverts and ditches that will be cut off by the line-of-protection, bridges, hydraulic structures, and flood plain channels and overbank areas. Several meetings were held with the Napa Department of Public Works and Sacramento District to discuss existing and proposed

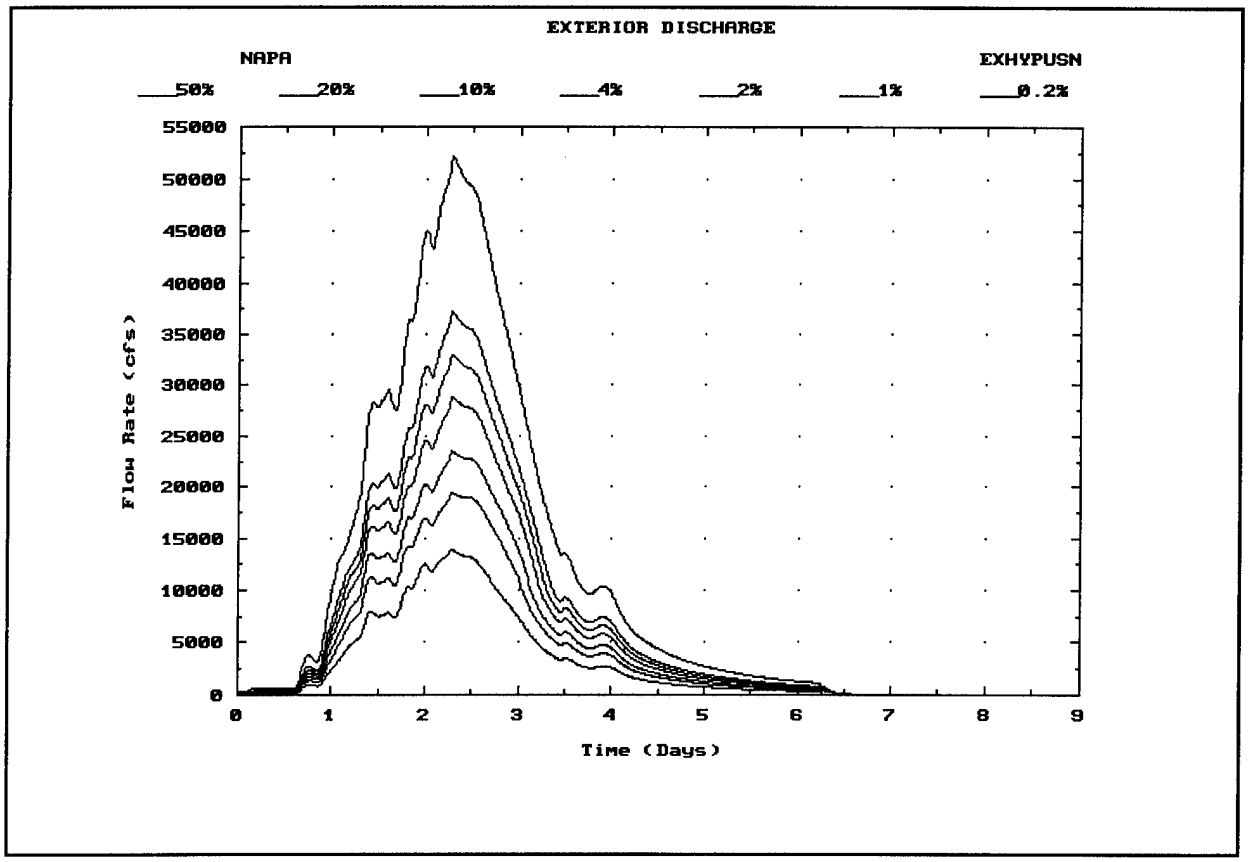

Figure 11. Hypothetical Flood Hydrographs for Exterior Basin - HEA

storm conveyance systems and proposed interior features that would convey storm runoff through the line-of-protection.

g. Gravity Outlets. The characteristics and configuration of typical new gravity outlets were defined to establish gravity outlet parameters and for developing rating curves for the outlets. This information included 1) culvert length, size, etc., 2) invert elevations and slopes consistent with existing storm sewers, 3) culvert type (box or circular, concrete or CMP, etc.), and 4) entrance and exit configurations.

The typical outlet through the line-of-protection was defined as a reinforced concrete pipe (RCP) or a concrete box culvert with grated drop inlets. The bottom elevations of the drop inlets are established by the existing storm sewer inverts entering the drop inlets. Lengths of the box culverts were dependant on whether the line-of-protection consisted of a set back levee, sheetpile wall, or concrete flood wall at the outfall. Slopes of the box culverts were set to maintain the slopes and outlet invert elevations of the existing outlets as close as possible. Required information was taken from project drawings provided by the district and existing storm sewer layouts provided by the City of Napa. Manual gate closure valves as well as flap gates will be included as part of each new outlet. The minimum head differential required for gravity flow was specified as 0.5 feet. No special gate closure requirements were established. It was assumed in the analysis that all outlets in an interior area are common to one ponding

area and that the storm sewers are hydraulically connected unless specifically stated otherwise. New outlets were sized based on City of Napa storm sewer design criteria as described in Section 5. However, the minimum size of the replacement culvert for each existing outlet was a 36-inch RCP at the primary locations and a 24-inch RCP at the secondary locations. This minimum size controlled the size of the recommended minimum facility for several locations. (See Table 4). Plates 1 through 30, previously referenced, include interior area maps and outlet configuration drawings show the location and characteristics of existing and recommended replacement outlets for each location.

h. Pumping Stations. Typical pumping station configuration and operation were determined through coordination with the district. The criterion for number of pumps and pumping station capacity was that each pumping station would have a total of three pumps, each having two-thirds of the total designated station capacity. Two of these pumps would be operating as needed and one would be for back up incase one of the other pumps went out of service. For example, a 600-CFS pumping station would include three 200-CFS (90,000 GPM) pumps, two of which would be operating. Pump head-capacity-efficiency relationships were determined from pump performance curves provided by the district. Figure 12 shows the relationships for a 200-CFS (90,000 GPM) pump unit.

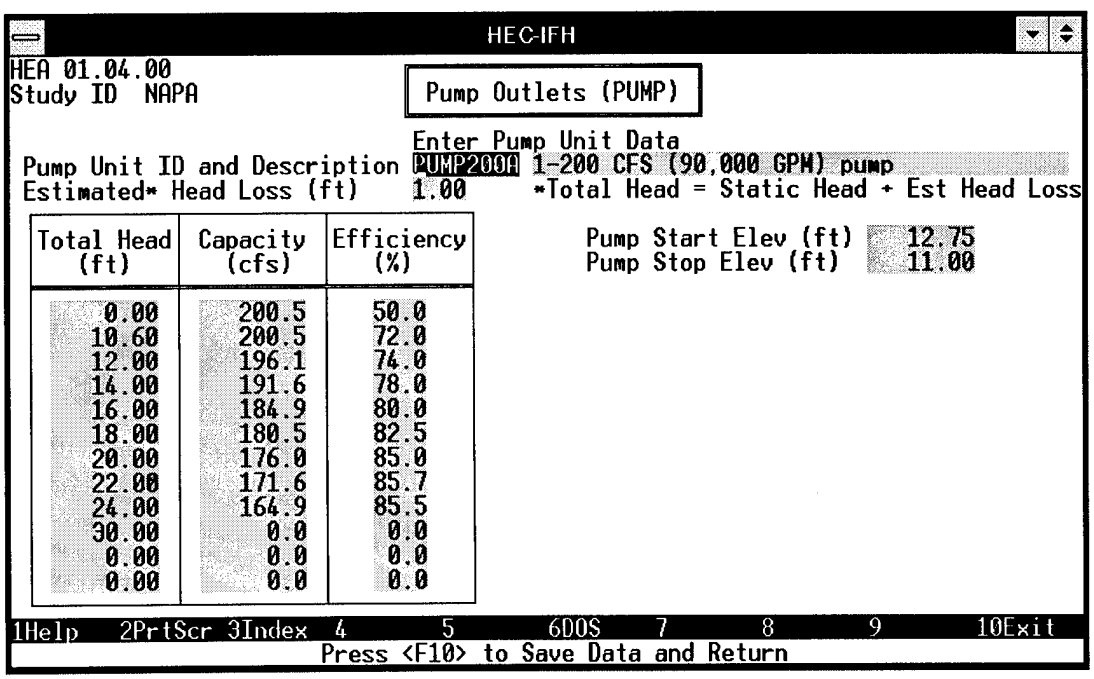

Total Head (ft)	Capacity (cfs)	Efficiency (%)
0.00	200.5	50.0
10.60	200.5	72.0
12.00	196.1	74.0
14.00	191.6	78.0
16.00	184.9	80.0
18.00	180.5	82.5
20.00	176.0	85.0
22.00	171.6	85.7
24.00	164.9	85.5
30.00	0.0	0.0
0.00	0.0	0.0
0.00	0.0	0.0

Figure 12. Pump Unit Head-Capacity-Efficiency Data

Pump on and off elevations were determined so that the pumps come on to reduce damaging stages and turn off when stages drop below damaging levels.

However, pumps should not cycle on and off over very short periods. Pump on/off elevations were determined based on the "zero damage" elevation and rate-of-rise for the ponding areas in each interior area. Pump on/off elevations may need adjusting depending on the final design configuration of the pumping station. Typical pump on and off elevations for the two operating pump units for a 600-CFS station are shown in Figure 13 and are based on a "zero damage" elevation of 14.0 feet for interior Area 5.

HEC-IFH

HEA 01.04.00
Study ID NAPA
Plan ID PLAN5-4C

Hydrologic Analysis Summaries

Begin 01/0005
End 07/0600

D. Analysis Input Summaries - Pump Station Data

PUMP Module ID PMOD600 600 CFS Station (2-200 CFS Pumps Oper.)

Pump Number	Pump Unit ID	Maximum Capacity (cfs)	Pump Start Elevation (ft)	Pump Stop Elevation (ft)	Maximum Total Head (ft)
1	PUMP200A	200.5	12.75	11.00	30.00
2	PUMP200B	200.5	13.25	11.75	30.00
3					
4					
5					
6					
7					
8					
9					
10					

1Help 2PrtScr 3 4 5 6DOS 7 8 9 10Exit

Press <F10> to Return

Figure 13. Pumping Station Data for Interior Area 5

i. Auxiliary Flow. Auxiliary flow includes auxiliary inflow to the interior subbasin, diversions out of the system, seepage inflow from the exterior (Napa River) to the interior area, and overflow out of the interior area. As indicated in Section 4.c.(3), there are two diversions used in the Napa interior study. Area 1 has a diversion from the upper area that represents flow in excess of the capacity of the culverts under Highway 29. Area 5 employed a diversion to account for the effect of the existing 54 inch and 72 inch pipes that convey runoff to the Napa River form the area. Specified diversions for Area 5 are shown in Figure 14. Auxiliary overflow was used to simulate interior runoff overflowing to the adjacent interior area (Areas 2B, 3, 4A, and 4B) or for overflow out of the protected area (Area 1). Auxiliary inflow was used to simulate the runoff contribution of overflow from the adjacent area (Areas 1, 2A, 2B, and 4A). . Seepage was not considered a factor for the Napa River interior study because the minimum time earthen embankments would be inundated and the extensive use of sheetpile and concrete flood walls along the line-of-protection. Figure 15 shows the auxiliary flow components for Area 1

```
HEC-IFH
HEA 01.04.00
Study ID  NAPA        [ Auxiliary Inflow/Outflow (AUXFLOW) ]

                      Enter Diversion Rate for Upper Sub-Basin

Diversion Table ID  AREA5U

Description
  Outflow to Napa R via Pueblo & Trancas.

1Help  2PrtScr 3   4   5   6DOS   7   8   9   10Exit
Press <F10> to Save Data and Return
```

Runoff + Aux. Inflow (cfs)	Diverted Flow (cfs)
0.0	0.0
10.0	10.0
50.0	50.0
100.0	100.0
200.0	200.0
350.0	350.0
10000.0	350.0
0.0	0.0
0.0	0.0
0.0	0.0
0.0	0.0
0.0	0.0
0.0	0.0

Figure 14. Diversion Rate for the Upper Subbasin - Interior Area 5

```
HEC-IFH
HEA 01.04.00
Study ID  NAPA        [ Auxiliary Inflow/Outflow (AUXFLOW) ]

                      Specify Auxiliary Flow Data

            Module ID     AREA1
            Description   Area 1 overflow, inflow and diversion

  Lower Sub-Basin Auxiliary Inflow ID  AREA1
                                       Area 1 inflow from Area 3 overflow - HEA

  Upper Sub-Basin Diversion Table ID   AREA1U
                                       Diversion of Q exceed. cap of 2-2X5 Box

  Lower Sub-Basin Overflow Table ID    AREA1
                                       Area 1 overflow across Imola above 11.5

  Lower Sub-Basin Seepage Table ID

1Help  2PrtScr 3   4   5   6DOS   7   8   9   10Exit
Press <F10> to Save Data and Return
```

Figure 15. Auxiliary Flow Components for Interior Area 1 - HEA

j. Water Surface Profile Data. Water surface profiles for with-project conditions were developed by the district using the HEC-2 program. These profiles were used to determine rating curves for the Napa River at interior area primary outlet locations. An example rating curve for Napa River at the Area 5 primary location is shown in Figure 16. The water surface profiles were also used to determine exterior stage transfer relationships for transferring the computed exterior stage at the primary outlet location to the secondary outlet locations. An example of the transfer relationships is shown in Figure 17.

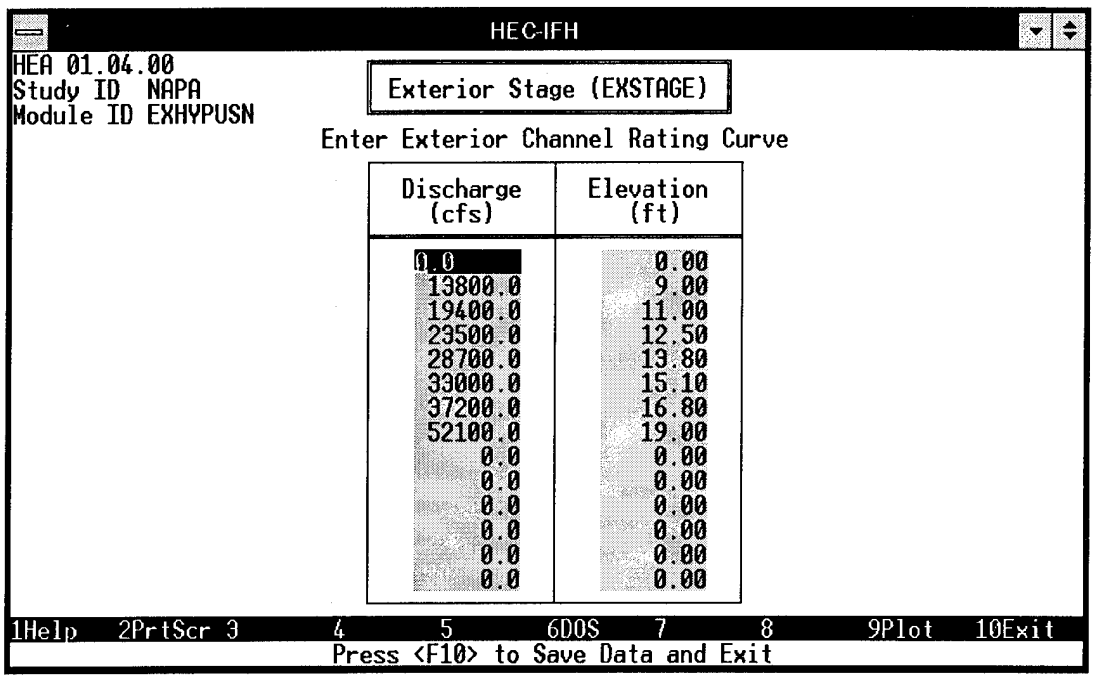

Figure 16. Exterior Rating Curve for Interior Area 5

k. Stage-Damage Relationships. Representative stage-damage relationships for the interior areas at runoff concentration points are required for economic analysis and identification of interior plans that maximize net flood damage reduction benefits. Economic analysis is not part of this investigation, and therefore, complete stage damage relationships were not required. The elevation where significant damage begins or "zero damage" was required to establish the size of the minimum facility and to set pump on/off elevations. These elevations are shown in Table 3 (Section 6. b.).

HEC-IFH

HEA 01.04.00
Study ID NAPA
Module ID EXHYPUSN

Exterior Stage (EXSTAGE)

Main River Transfer Relationships

Index Elev. (ft)	Transferred Elevation (ft)				
	Primary Outlet	Secondary Gravity 1	Secondary Gravity 2	Secondary Gravity 3	Secondary Gravity 4
0.00	0.00	0.00	0.00	0.00	0.00
9.10	9.10	12.30	13.50	14.00	0.00
16.80	16.80	20.00	22.50	23.20	0.00
30.00	30.00	33.00	35.00	36.00	0.00
0.00	0.00	0.00	0.00	0.00	0.00
0.00	0.00	0.00	0.00	0.00	0.00
0.00	0.00	0.00	0.00	0.00	0.00
0.00	0.00	0.00	0.00	0.00	0.00
0.00	0.00	0.00	0.00	0.00	0.00
0.00	0.00	0.00	0.00	0.00	0.00
0.00	0.00	0.00	0.00	0.00	0.00
0.00	0.00	0.00	0.00	0.00	0.00

1Help 2PrtScr 3 4 5 6DOS 7 8 9Plot 10Exit

Press <F10> to Save Data and Exit

Figure 17. Exterior Stage Transfer Relationships for Area 5

5. Without-project Conditions Analysis for Minimum Facility Evaluation

a. General. The without-project analysis involves evaluation of conditions with and without the line-of-protection in place. Degree of flooding for these conditions is needed to select a minimum facility. The without-project condition used to formulate and evaluate the interior flood damage reduction measures will assume that the adopted minimum facility is in place and is described in Section 6, Minimum Facility Analysis.

b. Napa River Flooding Without Line-of-Protection. The source of serious flooding in the City of Napa is the Napa River and to a lessor extent Napa Creek. The recommended flood damage reduction project protects the city from flooding up to the one-percent chance flood for both the Napa River and Napa Creek. The basis for sizing the minimum facility is to assure that flooding from local storm runoff, when the Napa River and Napa Creek are below bank full, is not more frequent with the line-of-protection in place than without the line-of-protection in place.

c. Local Runoff Flooding Without Line-of-Protection. Local flooding was evaluated without the line-of-protection in place, assuming the present storm sewer

system in place, and Napa River and Napa Creek below flood stage. Stage-frequency relationships for this condition were not developed due to lack of data. Storm sewer system design criteria for the City of Napa, used for existing and new systems, were well documented and were used to establish the target condition for the minimum outlet facility analysis. The first criterion used was that only minor street and gutter flooding should occur up to the 10-percent chance (10-year) flood event. Minor street and gutter flooding in this case is defined as not exceeding a depth that would result in flooding more than 10 feet from the street gutter. The second criterion was that no significant damages from flooding will occur in residential and commercial areas from floods up to the 4-percent chance (25-year) flood event. This second criterion was interpreted as meaning that the interior stage resulting from the 4-percent chance event should not exceed the start of significant damage elevations determined by the district office. Based on the past performance of the existing sewer system and the overall reasonableness of the criteria, the storm sewer system design criteria were adopted for sizing the minimum facilities.

d. Assess Future Without Project Conditions Impacts. Future conditions that could affect Napa River interior area local runoff flooding were considered. Hydrologic and/or hydraulic conditions are not expected to significantly change over the project life, and therefore, no changes needed to be incorporated into the analysis. The interior areas are fully urbanized and limited future urbanization would have minimal effect on watershed runoff. Proposed and planned improvements in the existing storm sewer system, as described by the City of Napa, were evaluated and incorporate in the interior areas where appropriate.

6. Minimum Facility Analysis

a. General. The adopted minimum facilities, sized according to the criteria described in Section 5.c., are justified as part of the line-of-protection. The stage-frequency relationships for the with-minimum facility in place condition become the without condition for evaluating potential interior flood damage reduction measures beyond the minimum facility. The residual damage with the minimum facility in place becomes the target for damage reduction of proposed additional interior flood damage reduction measures. As described previously, the minimum facility was sized to provide interior flooding relief so that during low exterior stages (unblocked gravity outlet conditions) the local interior area runoff will pass the design storm sewer outflow without an increase in interior stages over natural or without line-of-protection conditions.

b. Selecting the Minimum Facility. A series of gravity outlet capacities and configurations using local storm hypothetical event analysis (HEA) and assuming unblocked conditions were evaluated using the HEC-IFH program. The physical characteristics of the gravity outlets were described in Section 4.g. A new plan was defined for each gravity outlet capacity to be evaluated and the interior stage-frequency relationship was developed for each outlet. An example of the plan components, as

defined in the HEC-IFH program for one plan evaluated for interior Area 5, is shown in Figure 18.

```
HEC-IFH
HEA 01.04.00
Study ID  NAPA                Perform Interior Analysis

  Plan ID  PLAN5-1D   Description  Area 5 Min. Fac. 2-5X5.5 boxes-HEA unblk

| Module                      | Module ID | Description                                |
|---|---|---|
| Basin Average Precipitation | PRECHLOC  | General rain interior area hyp. precip.    |
| Runoff Hydrograph Parameters | A5-HEA   | Area 5 (U & L) runoff for HEA              |
| Interior Pond               | POND5     | Pond surface area-elevation for Area 5     |
| Gravity Outlets             | OUTMOD5B  | New Dbl 5X5.5 box at primary- Soscal Ave   |
| Pump Data                   |           |                                            |
| Exterior Stage              | UNBLOCK   | Low Napa River exstage (unblocked cond.)   |
| Auxiliary Flow              | AREA5     | Outflow to Napa R via Pueblo & Trancas     |

    ANNUAL series
    Computation Time Interval (e.g. 1HOUR, 1DAY, ...)    5MIN
    Number of Time Intervals                              1800

1Help  2PrtScr 3   4   5   6DOS   7   8   9   10Exit
Press <F10> to Proceed to the Menu
```

Figure 18. Plan Components, Minimum Facility - HEA, Unblocked

The stage-frequency relationships of gravity outlets were compared with the storm sewer design criteria described previously and the outlet size that came closest to meeting the criteria was selected. For each interior area, the 4-percent chance elevation, with the minimum facility in place, was less than the start of significant damage stage. It was assumed, based on examination of the stage-frequency relationships, the criterion for minor street flooding having less than a 10-percent chance of occurring was met if the 4-percent chance stage criterion was satisfied. The stage-frequency relationship with the minimum facility in place and unblocked conditions for interior Area 5 is shown in Figure 19. Stages associated with the start of significant damage, the 4-percent chance exceedance, and the 10-percent chance exceedance for all of the interior areas are shown in Table 3. The specified minimum size consisting of a 36-inch RCP at primary locations and a 24-inch RCP at secondary locations controlled the size of the recommended minimum facility for locations 2B.2, 3.0, all locations in Area 4, and location 6.0. The recommended minimum facilities for the Napa interior areas are shown in Table 4.

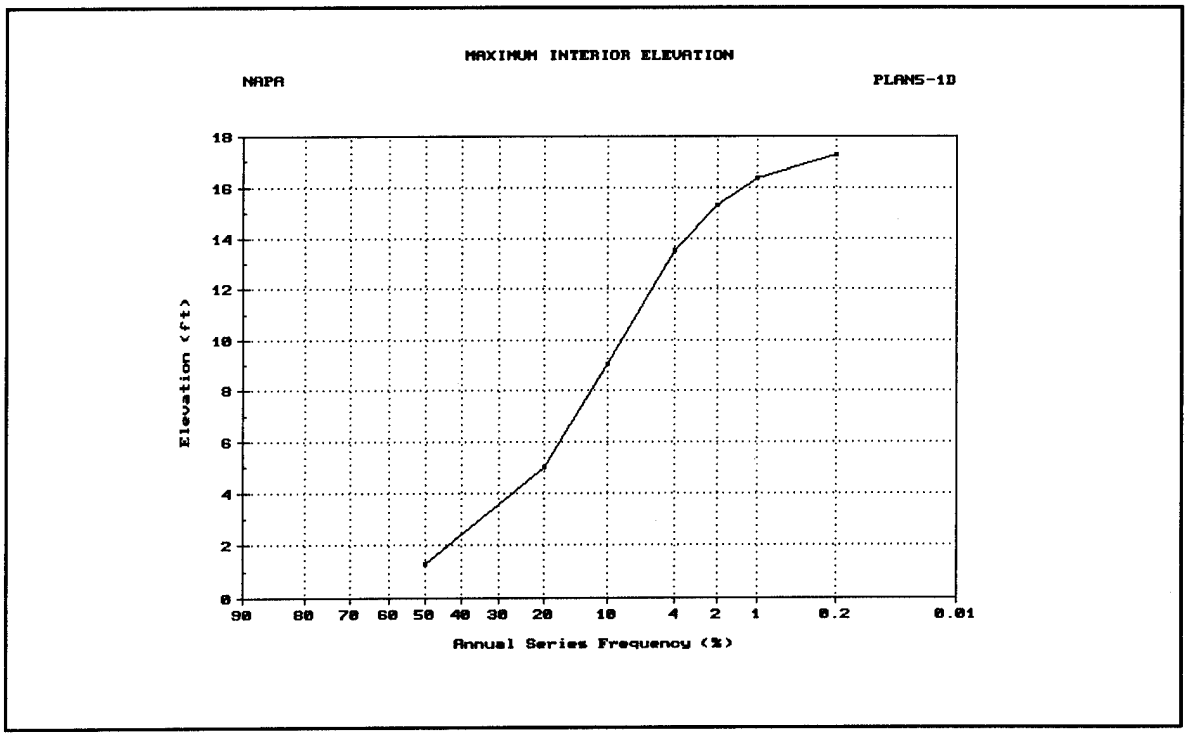

Figure 19. Stage-Frequency for Minimum Facility - Area 5, HEA, Unblocked

Table 3
Stages for Determining the Minimum Facility for Interior Areas

Area	Start of Significant Damage (FT)	Interior stage (FT)[1]	
		4-Percent	10-Percent
1	9.5	9.46	9.14
2A	10.0	7.73	7.48
2B	11.0	4.35[2]	3.47
3	9.5	3.97[3]	3.24
4A	15.0	10.83[3]	8.75
4B	15.5	15.11	14.34
5	14.0	13.55	9.04
6	15.8	9.13[3]	8.58

[1] From HEA with minimum facility in place and unblocked conditions (low Napa River Stage).
[2] Used 5 FT X 5 FT box culvert as minimum facility to replace existing outlet capacity (1-66 in RCP).
[3] This location has smallest recommended minimum facility for primary location (1-36 in).

Table 4. Napa Interior Flood Hydrology Recommended Minimum Facilities

Interior Area	Designation	Location			Existing Outlet	Recommended Minimum Facility			
		Bank	Street	Station		No.	Size[1]	Length (FT)	Con. to Primary[2]
1	1.0	West	Imola Ave	704.0	1-30" RCP	1	4'X6' Box	38	—
	1.1	West	Coombs	716.5	1-54" RCP	1	4'X4' Box	38	Yes
2A	2A.0	North	Tulucay Cr.	727.0	None	1	4'X4' Box[3]	50	—
2B	2B.0	East	Oil Co. Rd.	746.0	1-66" RCP	1	5'X5' Box	100	—
	2B.1	East	Eight St.	754.0	1-48" RCP	1	48" RCP	22	Yes
	2B.2	East	Sixth St.	762.0	1-6" + 1-12"	1	24" RCP	16	Yes
3	3.0	West	Ash St.	720.0	1-18" RCP	1	36" RCP	45	—
	3.1	West	Elm St.	731.0	1-30" RCP	1	30" RCP	52	Yes
	3.2	West	Pine St.	736.7	1-60" RCP	1	4.5'X4.5' Box	24	Yes
	3.3	West	Laural St.	742.0	1-30" RCP	1	30" RCP	24	Yes
	3.4	West	Oak St.	748.0	1-30" RCP	1	36" RCP	23	Yes
	3.5	West	Division St.	757.0	1-54" RCP	1	4'X4' Box	23	Yes
4A	4A.0	East	Taylor St.	791.5	1-30" RCP	1	36" RCP	50	—
	4A.1	East	Post St.	794.5	1-12" RCP	1	24" RCP	40	Yes
	4A.2	East	Second St.	796.5	1-24" RCP	1	24" RCP	48	Yes
	4A.3	East	First St.	800.5	1-18" RCP	1	24" RCP	40	Yes
	4A.4	East	Clay St.	803.0	1-10" RCP	1	24" RCP	48	Yes
	4.99	East	Third St.	771.5	1-18" RCP	1	24" RCP	14	No
4B	4B.0	East	Juarez St.	806.5	None	1	48" RCP[3]	38	—
5	5.0	West	Soscol Ave.	781.5	1-42"	2	5'X5.5' Box	44	—
	5.1	West	Imperial Way	831.5	1-24" RCP	1	24" RCP	40	No
	5.2	West	N. Bay Drive	841.3	1-18" RCP	1	24" RCP	36	No
	5.3	West	Lincoln Ave	849.5	1-30" RCP	1	30" RCP	53	No
6	6.0	West	McKinstry St.	783.0	1-27" RCP	1	36" RCP	18	—

[1] All have drop inlet unless otherwise noted.
[2] Indication as to whether outlets are connected hydraulically to the primary outlet by ditch or culvert.
[3] No Drop Inlet required.

c. Without Project Condition Stage-Frequency Relationship with the Minimum Facility in Place. After the minimum facility was selected, it was evaluated using general rain hypothetical event analysis (HEA). New general rain HEA plans were defined using precipitation depth-duration-frequency data for general rain events occurring over the Napa River watershed as well as the interior area. Exterior stages were computed from imported hypothetical flood discharge hydrographs and an appropriate stage-discharge rating for the Napa River at the interior area outlet, as previously described. The results of the analysis were based on general rain storms centered over both the interior and exterior basin causing flooding on both the interior and exterior basin and potential flooding that occurs during blocked conditions. An example of the resulting stage-frequency relationship, and a comparison with the stage-frequency relationship for unblocked conditions, is shown in Figure 20. Maximum annual interior elevation-, area flooded-, and inflow-frequency relationships for each interior area are shown on Figures 21 through 36. The stage-frequency relationships were used as the base condition for evaluating the effectiveness of additional gravity outlet capacity, as described in the following Section.

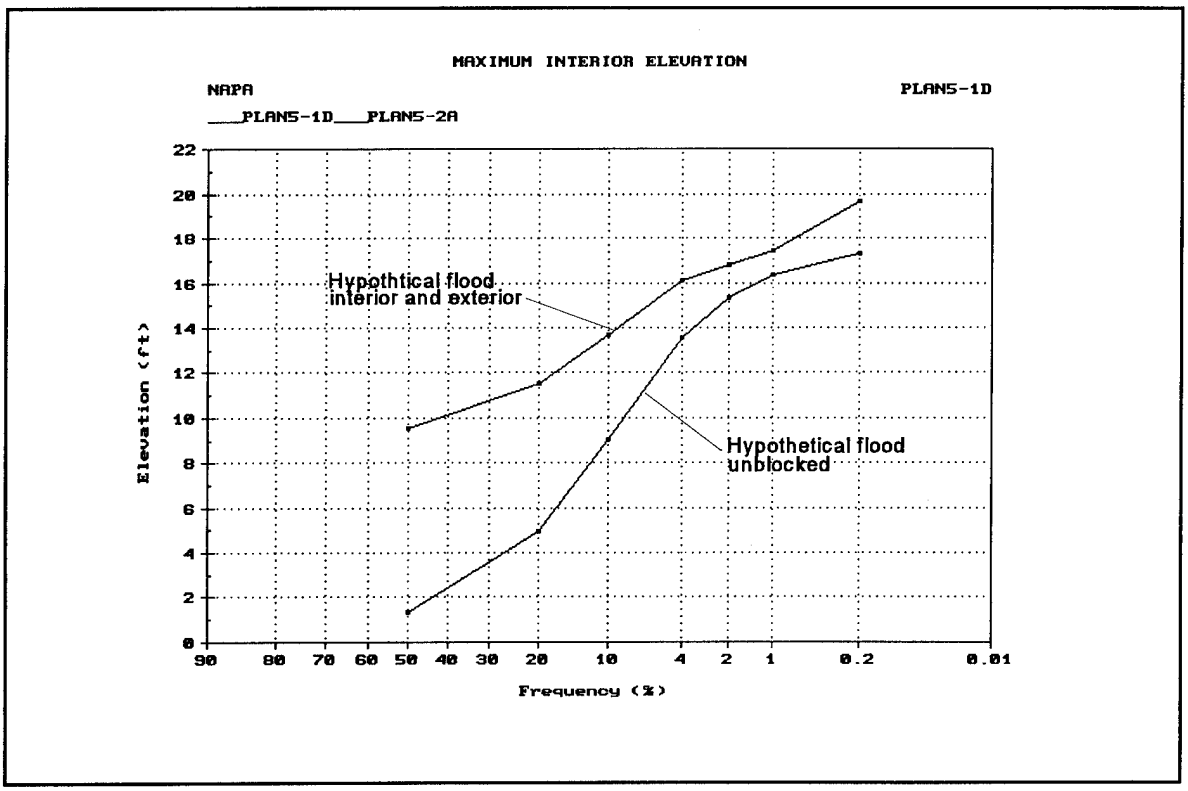

Figure 20. Stage-Frequency Relationships - HEA Unblocked and Interior/Exterior

Continuous simulation analysis (CSA) was performed using previously described period-of-record composite rainfall. The purpose of evaluating CSA in addition to HEA is to compare the resultant stage-frequency relationships. CSA captures the

HEC-IFH

HEA 01.04.00
Study ID NAPA
Plan ID PLAN1-2A

Hydrologic Analysis Summaries

R. Event Comparisons - Frequency Analysis

ANNUAL series Storm Area: 296.00 (sq mi)

Event	Maximum Interior Elevation (ft)	Maximum Interior Area Flooded (ac)	Maximum Total Interior Inflow (cfs)
50%	7.69	0.2	164.0
20%	9.32	7.6	254.0
10%	10.15	25.0	321.0
4%	11.21	39.2	398.0
2%	12.12	50.9	574.0
1%	12.72	56.4	732.0
0.2%	13.24	61.2	828.0
SPF	0.00	0.0	0.0

1Help 2PrtScr 3 4 5 6DOS 7 8 9Plot 10Exit

Press <F10> to Return

Figure 21. Interior Elevation-, Area Flooded-, Inflow-Frequency with Minimum Facility - Area 1

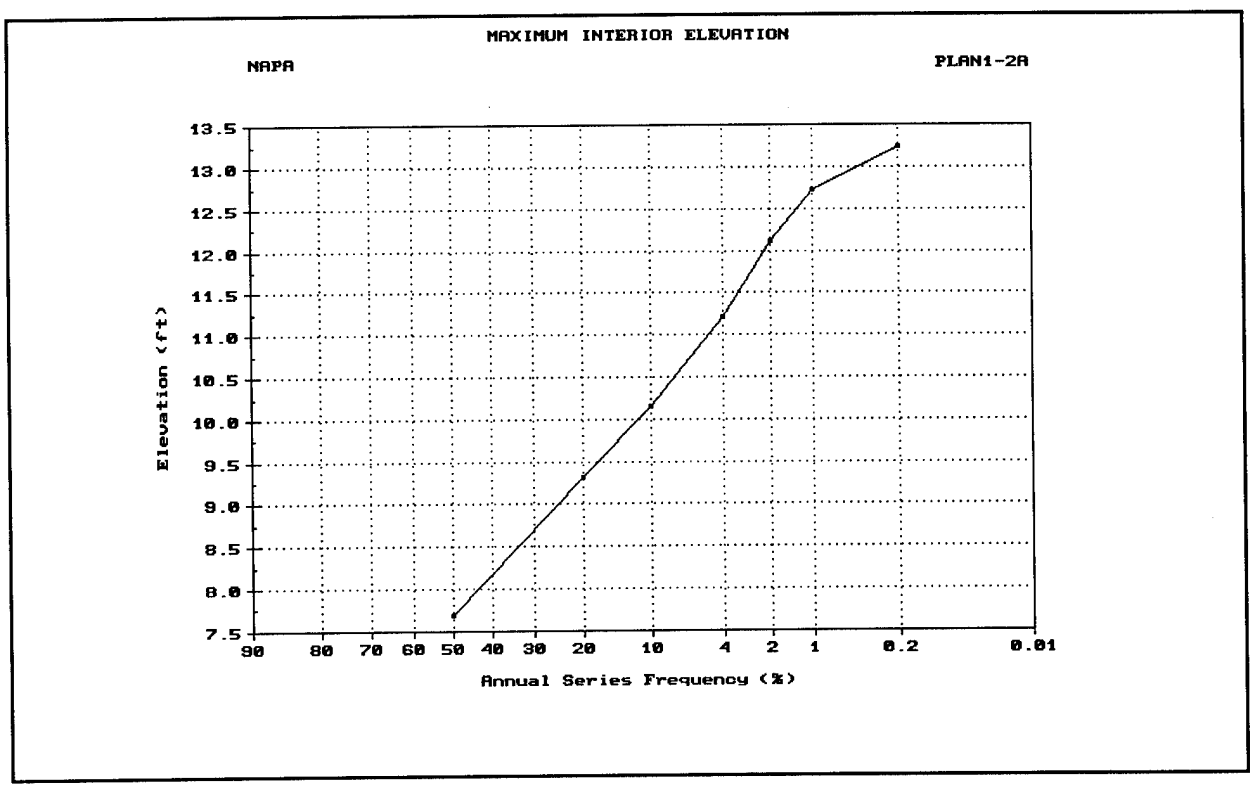

Figure 22. Interior Elevation-Frequency with Minimum Facility - Area 1

HEA 01.04.00
Study ID NAPA
Plan ID PLAN2A-2

Hydrologic Analysis Summaries

R. Event Comparisons - Frequency Analysis

ANNUAL series Storm Area: 281.00 (sq mi)

Event	Maximum Interior Elevation (ft)	Maximum Interior Area Flooded (ac)	Maximum Total Interior Inflow (cfs)
50%	7.52	15.9	47.0
20%	8.31	22.3	73.0
10%	8.79	26.8	92.0
4%	10.14	43.0	117.0
2%	11.64	101.2	331.0
1%	12.42	129.6	408.0
0.2%	13.58	169.0	553.0
SPF	0.00	0.0	0.0

Press <F10> to Return

Figure 23. Interior Elevation-, Area Flooded-, Inflow-Frequency with Minimum Facility - Area 2A

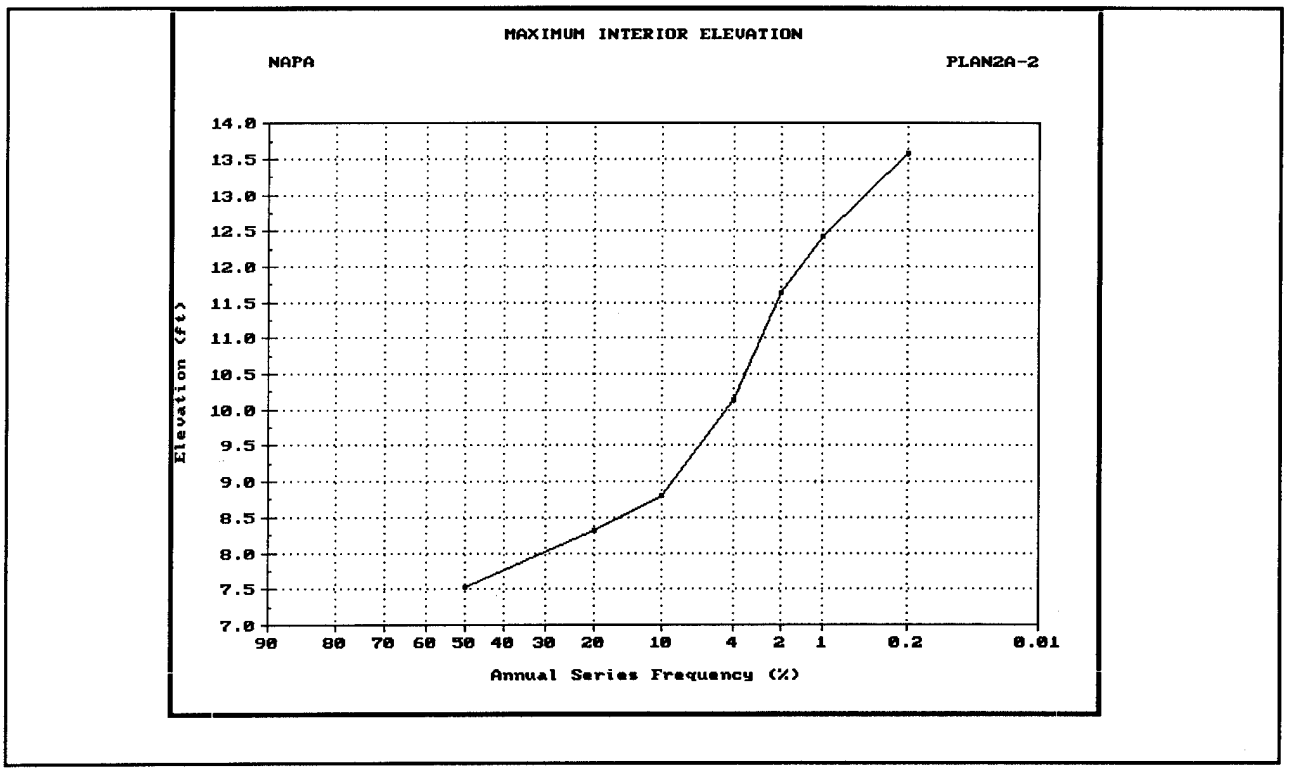

Figure 24. Interior Elevation-Frequency with Minimum Facility - Area 2A

HEC-IFH

HEA 01.04.00
Study ID NAPA
Plan ID PLAN2B-2

Hydrologic Analysis Summaries

R. Event Comparisons - Frequency Analysis

ANNUAL series Storm Area: 281.00 (sq mi)

Event	Maximum Interior Elevation (ft)	Maximum Interior Area Flooded (ac)	Maximum Total Interior Inflow (cfs)
50%	7.82	0.5	90.0
20%	9.50	4.6	140.0
10%	10.53	14.5	176.0
4%	11.27	26.4	226.0
2%	11.85	35.9	317.0
1%	12.14	41.6	463.0
0.2%	12.47	49.3	630.0
SPF	0.00	0.0	0.0

1Help 2PrtScr 3 4 5 6DOS 7 8 9Plot 10Exit

Press <F10> to Return

Figure 25. Interior Elevation-, Area Flooded-, Inflow-Frequency with Minimum Facility - Area 2B

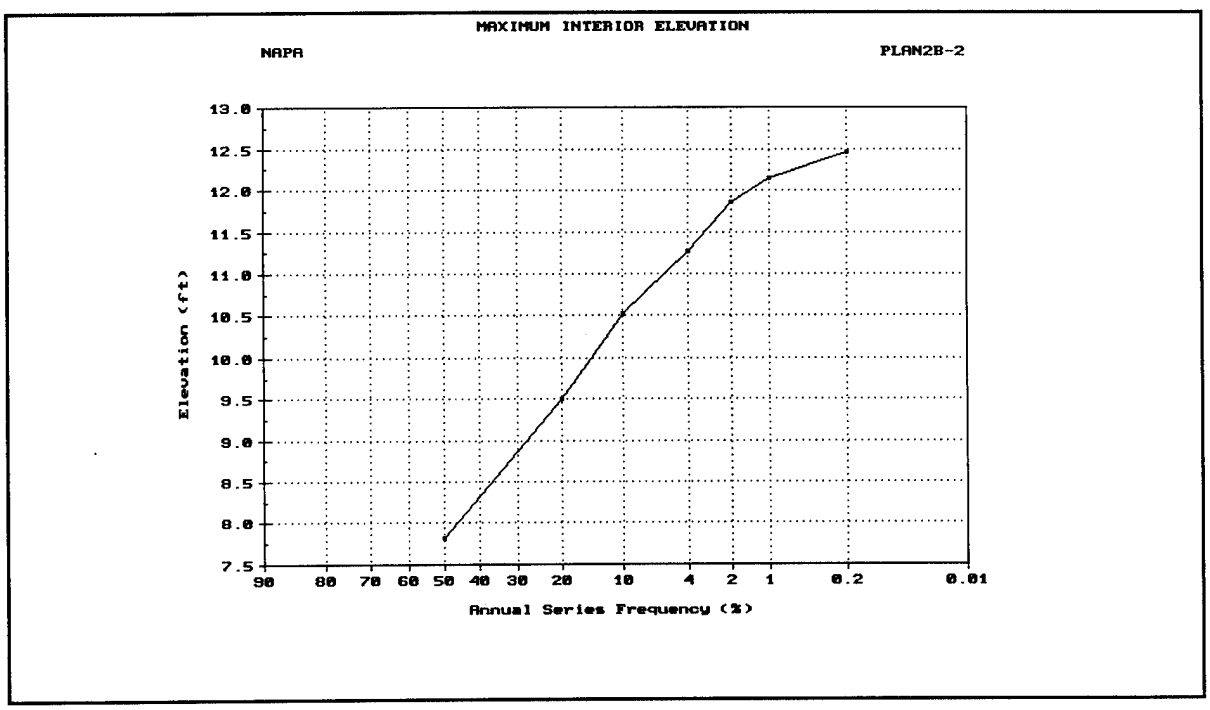

Figure 26. Interior Elevation-Frequency with Minimum Facility - Area 2B

HEC-IFH

HEA 01.04.00
Study ID NAPA
Plan ID PLAN3-2A

Hydrologic Analysis Summaries

R. Event Comparisons - Frequency Analysis

ANNUAL series Storm Area: 281.00 (sq mi)

Event	Maximum Interior Elevation (ft)	Maximum Interior Area Flooded (ac)	Maximum Total Interior Inflow (cfs)
50%	7.82	0.2	116.0
20%	9.50	0.7	181.0
10%	10.52	5.1	228.0
4%	11.55	13.9	277.0
2%	12.14	21.8	311.0
1%	12.45	26.6	345.0
0.2%	12.53	27.8	428.0
SPF	0.00	0.0	0.0

1Help 2PrtScr 3 4 5 6DOS 7 8 9Plot 10Exit

Press <F10> to Return

Figure 27. Interior Elevation-, Area Flooded-, Inflow-Frequency with Minimum Facility - Area 3

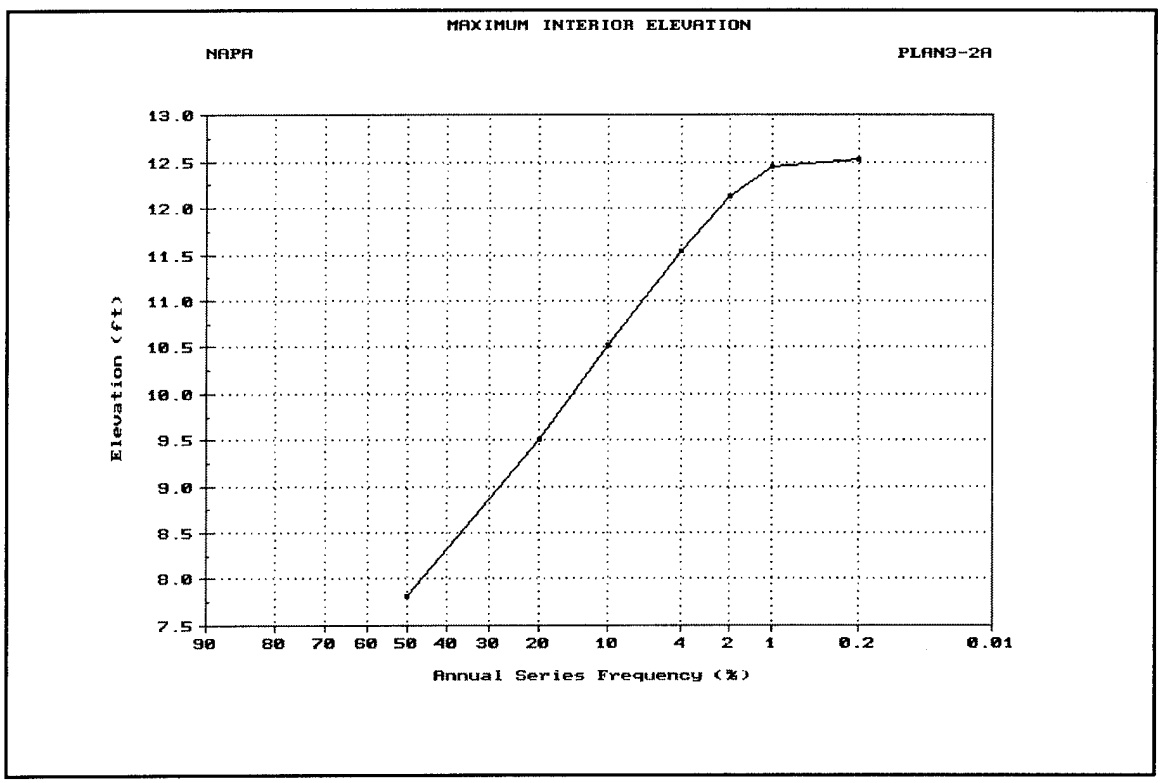

Figure 28. Interior Elevation-Frequency with Minimum Facility - Area 3

HEC-IFH

HEA 01.04.00
Study ID NAPA
Plan ID PLAN4A-2

Hydrologic Analysis Summaries

R. Event Comparisons - Frequency Analysis

ANNUAL series Storm Area: 266.00 (sq mi)

Event	Maximum Interior Elevation (ft)	Maximum Interior Area Flooded (ac)	Maximum Total Interior Inflow (cfs)
50%	9.54	0.1	62.0
20%	11.51	0.1	96.0
10%	13.01	0.2	120.0
4%	14.38	3.2	147.0
2%	14.59	6.6	164.0
1%	14.99	12.8	224.0
0.2%	15.23	16.6	361.0
SPF	0.00	0.0	0.0

1Help 2PrtScr 3 4 5 6DOS 7 8 9Plot 10Exit

Press <F10> to Return

Figure 29. Interior Elevation-, Area Flooded-, Inflow-Frequency with Minimum Facility - Area 4A

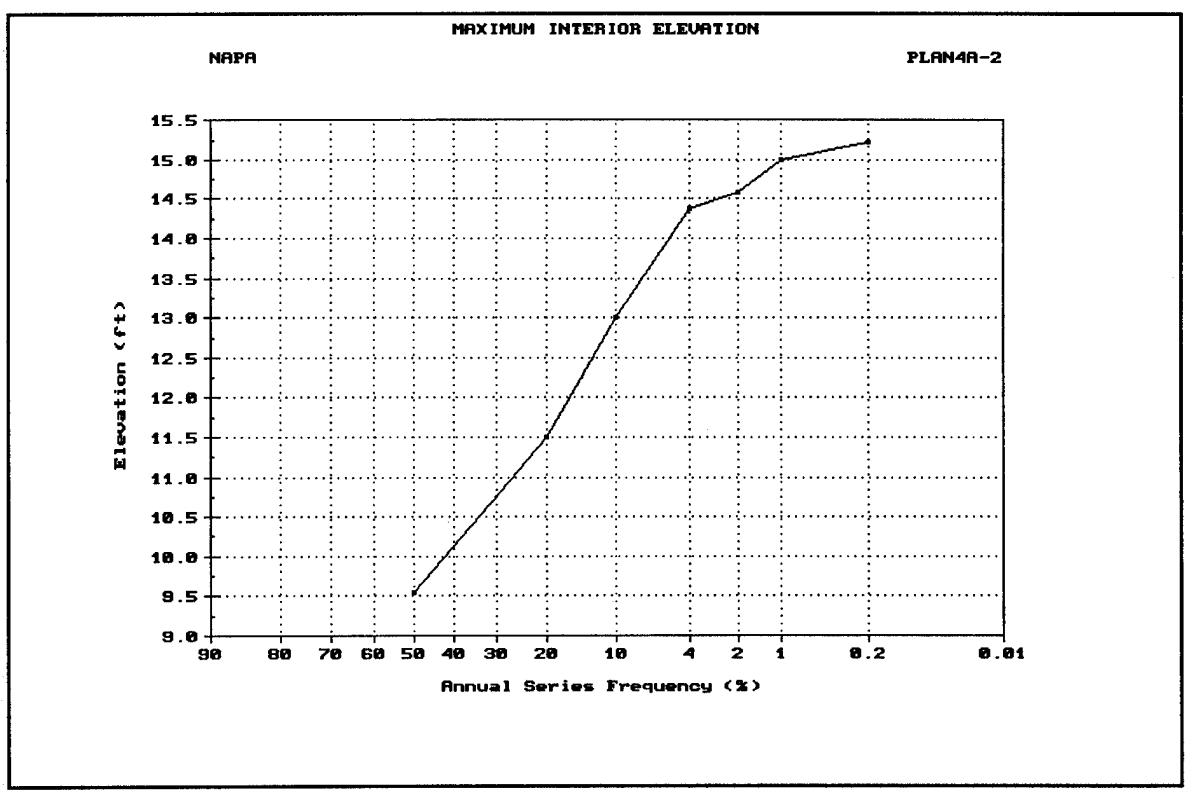

Figure 30. Interior Elevation-Frequency with Minimum Facility - Area 4A

HEC-IFH

HEA 01.04.00
Study ID NAPA
Plan ID PLAN4B-2

Hydrologic Analysis Summaries

R. Event Comparisons - Frequency Analysis

ANNUAL series Storm Area: 266.00 (sq mi)

Event	Maximum Interior Elevation (ft)	Maximum Interior Area Flooded (ac)	Maximum Total Interior Inflow (cfs)
50%	10.65	0.1	39.0
20%	11.53	0.1	61.0
10%	13.01	0.2	77.0
4%	14.33	0.4	94.0
2%	15.38	1.7	105.0
1%	15.50	2.0	117.0
0.2%	15.94	2.9	144.0
SPF	0.00	0.0	0.0

1Help 2PrtScr 3 4 5 6DOS 7 8 9Plot 10Exit

Press <F10> to Return

Figure 31. Interior Elevation-, Area Flooded-, Inflow-Frequency with Minimum Facility - Area 4B

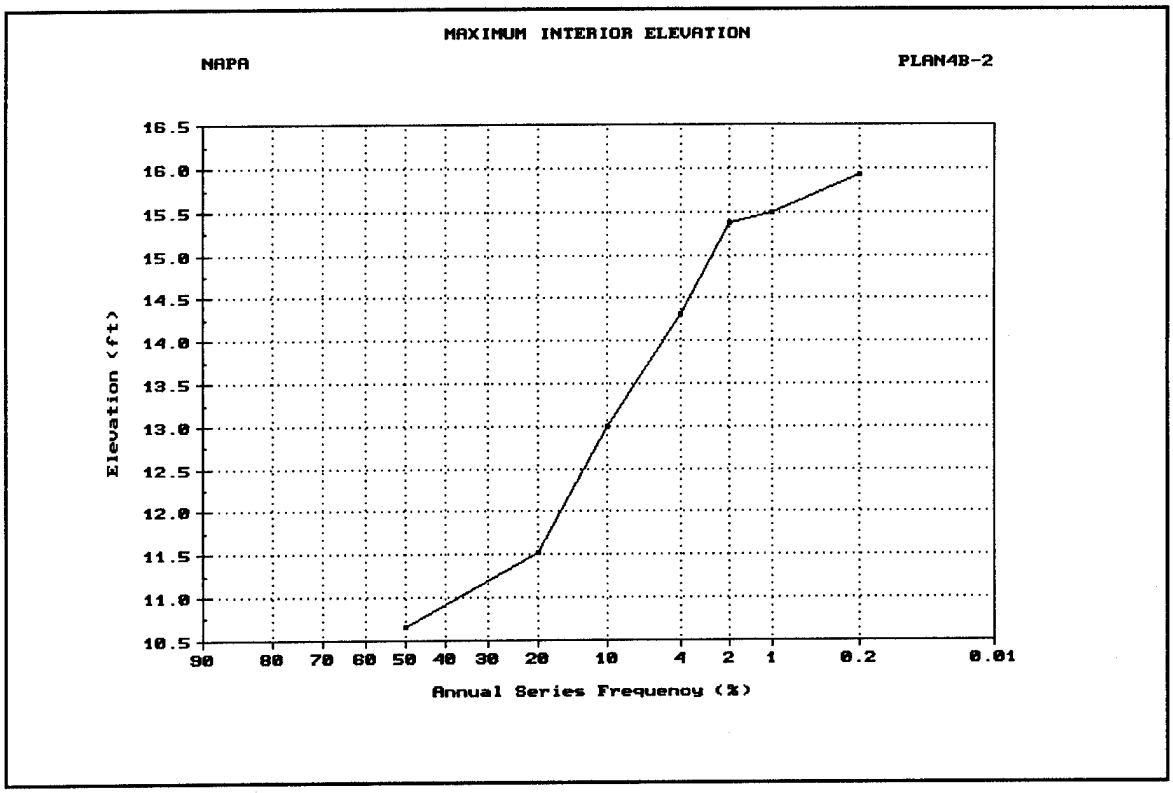

Figure 32. Interior Elevation-Frequency with Minimum Facility - Area 4B

HEC-IFH

HEA 01.04.00
Study ID NAPA
Plan ID PLAN5-2A

Hydrologic Analysis Summaries

R. Event Comparisons - Frequency Analysis

ANNUAL series Storm Area: 266.00 (sq mi)

Event	Maximum Interior Elevation (ft)	Maximum Interior Area Flooded (ac)	Maximum Total Interior Inflow (cfs)
50%	9.54	0.6	239.0
20%	11.51	0.7	374.0
10%	13.69	1.7	527.0
4%	16.09	10.4	716.0
2%	16.80	35.6	849.0
1%	17.46	49.0	981.0
0.2%	19.69	134.0	1300.0
SPF	0.00	0.0	0.0

1Help 2PrtScr 3 4 5 6DOS 7 8 9Plot 10Exit

Press <F10> to Return

Figure 33. Interior Elevation-, Area Flooded-, Inflow-Frequency with Minimum Facility - Area 5

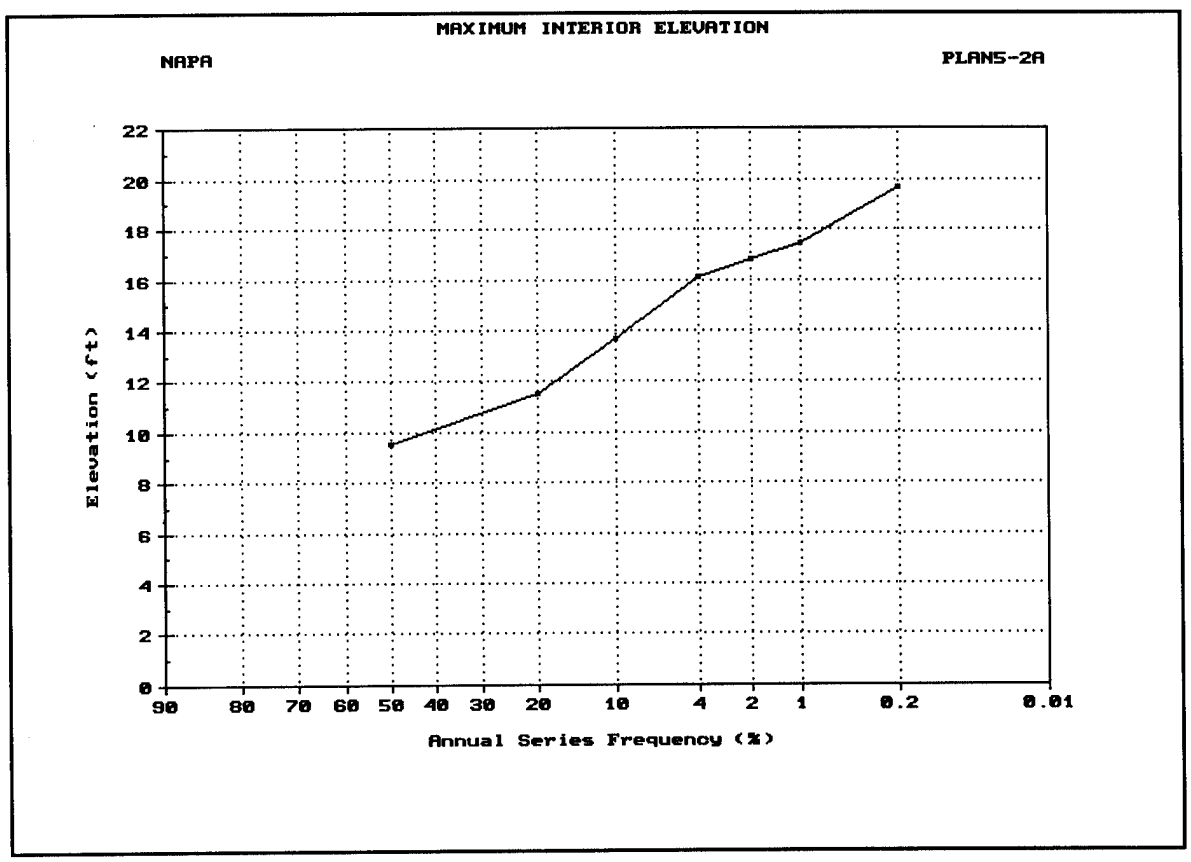

Figure 34. Interior Elevation-Frequency with Minimum Facility - Area 5

HEC-IFH

HEA 01.04.00
Study ID NAPA
Plan ID PLAN6-2

Hydrologic Analysis Summaries

R. Event Comparisons - Frequency Analysis

ANNUAL series Storm Area: 266.00 (sq mi)

Event	Maximum Interior Elevation (ft)	Maximum Interior Area Flooded (ac)	Maximum Total Interior Inflow (cfs)
50%	9.53	0.1	12.0
20%	11.51	0.2	19.0
10%	13.01	0.2	24.0
4%	14.32	1.0	29.0
2%	15.47	3.9	32.0
1%	16.27	6.4	36.0
0.2%	17.29	10.8	44.0
SPF	0.00	0.0	0.0

1Help 2PrtScr 3 4 5 6DOS 7 8 9Plot 10Exit
Press <F10> to Return

Figure 35. Interior Elevation-, Area Flooded-, Inflow-Frequency with Minimum Facility - Area 6

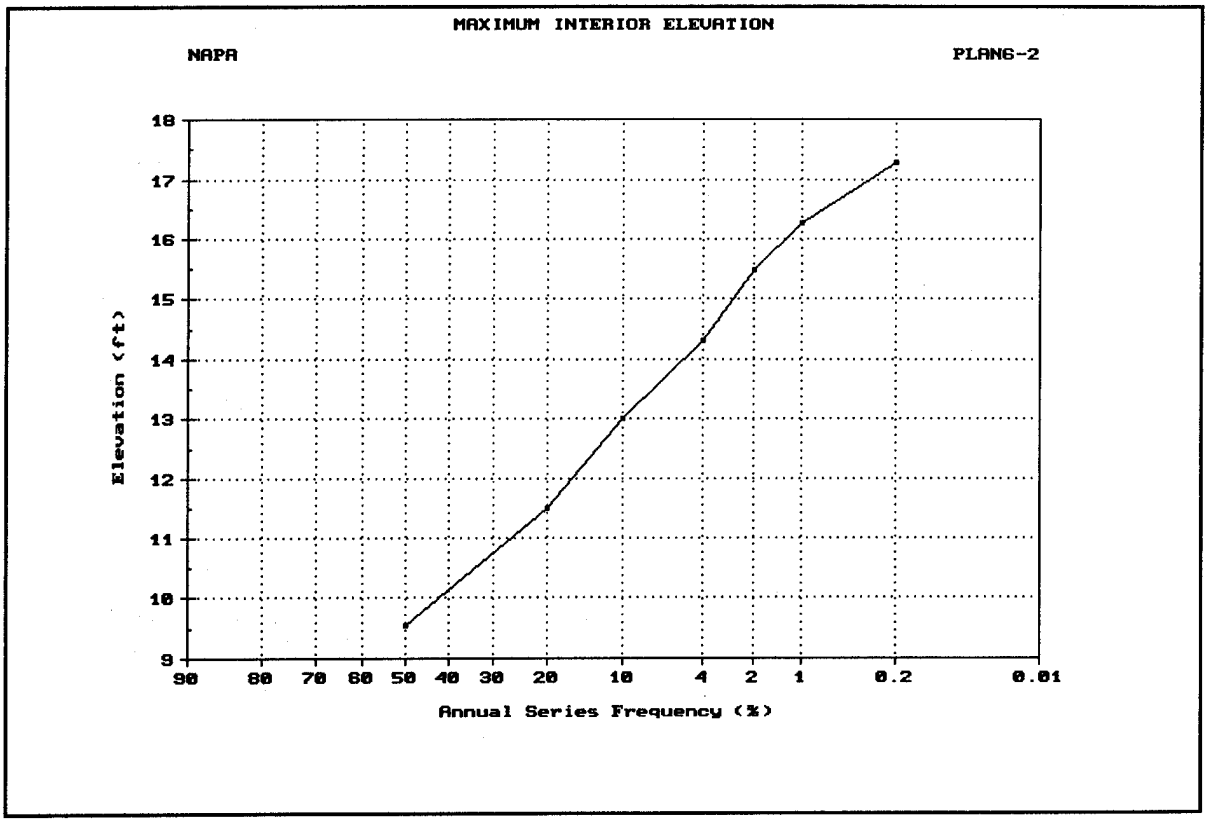

Figure 36. Interior Elevation-Frequency with Minimum Facility - Area 6

relationship between interior runoff and exterior stages whereas HEA assumes interior and exterior flooding is coincident.

Examination of CSA results for several historical events shows that interior and exterior flooding can be coincident, as illustrated in Figure 37 for the February 1986 event. An exception to this was the January 1973 event where the 41-year record interior rainfall and resultant runoff occurred while Napa River stages were very low. (See Figure 38.)

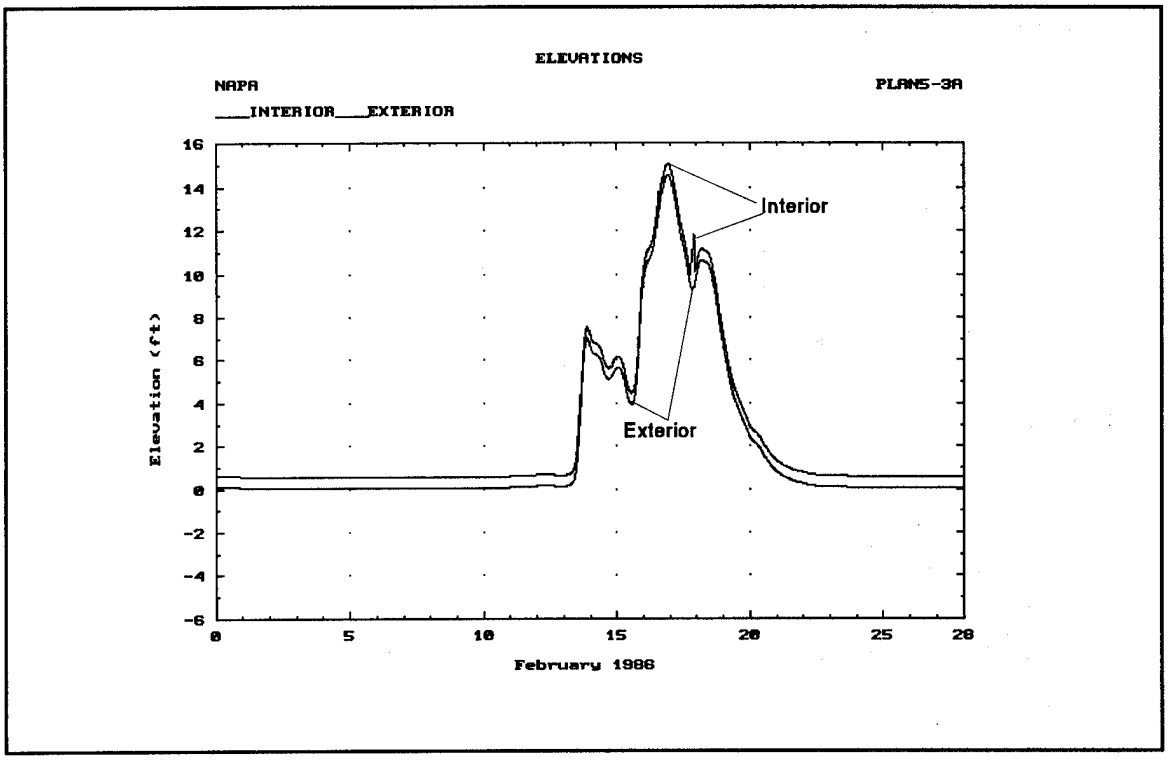

Figure 37. Interior and Exterior Elevation - February 1986, CSA

Timing of the peak interior runoff and the maximum exterior stage is critical in the Napa study due to the small ponding area storage available. Due to this fact and the fact that the historical CSA shows that the peak interior runoff can occur before, after, or simultaneous to the exterior peak stage, HEA stage-frequency relationships were adopted for the evaluation of interior features. HEA captures the critical combinations of interior runoff and exterior stages that can occur but are not always well represented in the historical record. Figure 39 shows a comparison of the stage-frequency relationships for CSA and HEA. The differences in stage are relatively minor considering a 2-foot difference in stage (17.0 minus 15.0) is equivalent to less than 0.25 inches of runoff from the interior area.

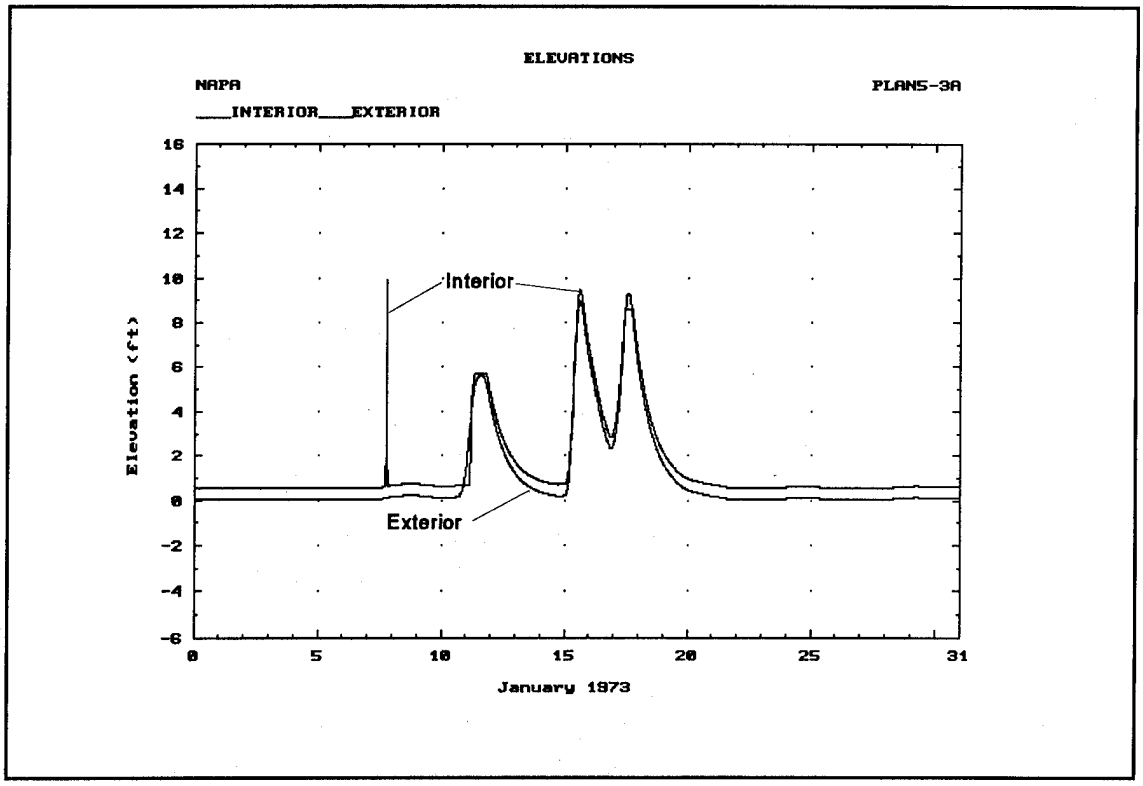

Figure 38. Interior and Exterior Stages - January 1973 Event, CSA

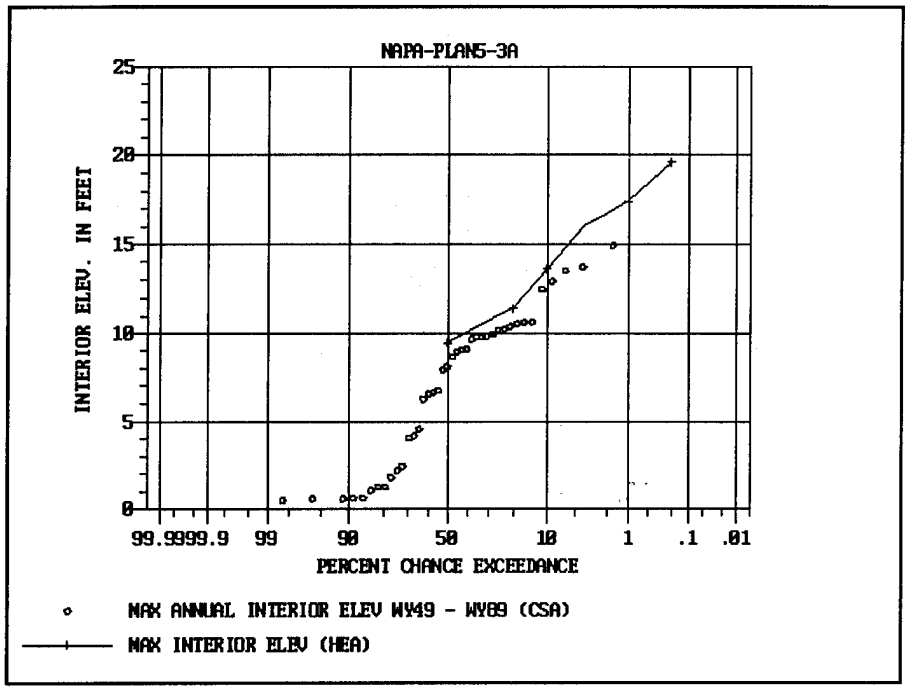

Figure 39. Interior Stage-Frequency Relationships for CSA and HEA - Area 5

The relatively good comparison between the relationships helps substantiate the reasonableness of the HEA developed stage-frequency relationship. The HEA stage-frequency relationships were adopted for the without condition and used for evaluating additional interior flood damage reduction measures, as described in Section 7.

7. Stage-Frequency for Interior Flood Damage Reduction Plans

a. General. The objective of this task is to develop stage-frequency relationships that can be used to formulate a set of flood damage reduction plans for each interior area. The condition with the line-of-protection and the selected minimum gravity outlet in place becomes the without project condition for evaluating additional features such as additional gravity outlets, pumping stations, additional ponding area storage, and nonstructural measures.

b. Evaluation of Additional Gravity Outlet Capacity. New plans for evaluating additional gravity outlet capacity using data previously developed for the HEA with the minimum facility in place were defined. Only the gravity outlet data needed to be changed to define plans with a range of outlet sizes. Four or five gravity outlet configurations (modules), with one or more gravity outlets in addition to the minimum facility outlet, were defined. Each module represents an incremental increase in total outlet capacity. Several plans that incorporated the gravity outlet modules were defined and interior stage-frequency relationships were developed for each plan. The HEA results were adopted as final stage-frequency relationship for each gravity outlet plan. These relationships are used in the economic analysis to select an optimal plan. An example plan summary showing four plans analyzed for Area 5 is included in Figure 40. Figure 41 shows a comparison of the plan stage-frequency relationships. Stage-frequency relationships were developed in this manner to evaluate additional gravity outlet capacity for each interior area. At the time of this writing, only Area 5 results indicated justification for additional outlet capacity due to considerable coincidence between interior runoff and high exterior stages. At the time of this writing, the preliminary economic optimal gravity outlet for Area 5 was selected as 4-5 X 5 ft. box culverts (Plan 5-2C). The recommended minimum facility, shown in Table 4, was selected as the final outlet size for the other areas.

HEC-IFH

HEA 01.04.00
Study ID NAPA

Comparison of Plans

A. Plan Summary

Plan ID	Type of Series	Storm Area (sq mi)	Storm Duration (hr)	Area of Primary Grav.Out (sq ft)	Min Pump Start Elev. (ft)	Min Pump Stop Elev. (ft)	Total Pump Capacity (cfs)
PLAN5-2A	ANNUAL	266.00	96.00	55.00	0.00	0.00	0.0
PLAN5-2B	ANNUAL	266.00	96.00	72.00	0.00	0.00	0.0
PLAN5-2F	ANNUAL	266.00	96.00	90.75	0.00	0.00	0.0
PLAN5-2C	ANNUAL	266.00	96.00	100.00	0.00	0.00	0.0
PLAN5-2D	ANNUAL	266.00	96.00	126.75	0.00	0.00	0.0

1Help 2PrtScr 3 4 5 6DOS 7 8 9 10Exit
Press <F10> to Return

Figure 40. Summary of Plans for Evaluating Outlet Capacity - HEA

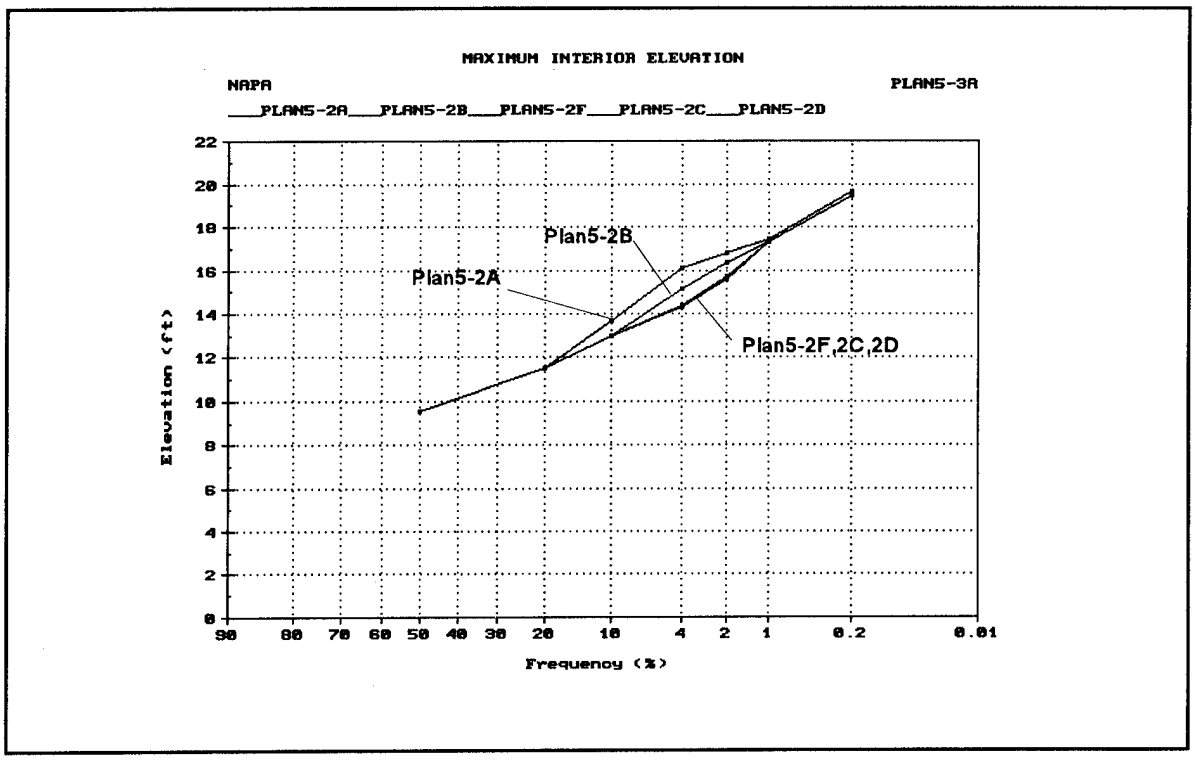

Figure 41. Stage-Frequency Relationships for a Range of Gravity Outlet Sizes

c. Determine Stage-Frequency for Added Pumping Capacity

(1) General - The final selected gravity outlet capacity becomes the base plan for evaluating the addition of pumping capacity. Residual damages may be significant, and pumps may be justified. The same steps described for evaluating additional gravity outlet capacity are appropriate for evaluating added pumping capacity. Some differences in the analysis are described below.

(2) Base condition - The base condition for evaluating pumping capacity is with the minimum facility or the economic optimal gravity outlet configuration in place. Several plans were evaluated against the base plan, each with an incremental increase in pumping capacity. HEA plans for the interior areas Area 5 with the selected outlet and three different size pumping stations were defined and analyzed. The plan configurations are shown in Figure 26 and the stage-frequency relationships are shown in Figure 27. These relationships were used to define the optimal pumping station size for interior Area 5. All interior areas were evaluated in this manner. At the time of this writing none of the interior area results indicate justification of pumping capacity.

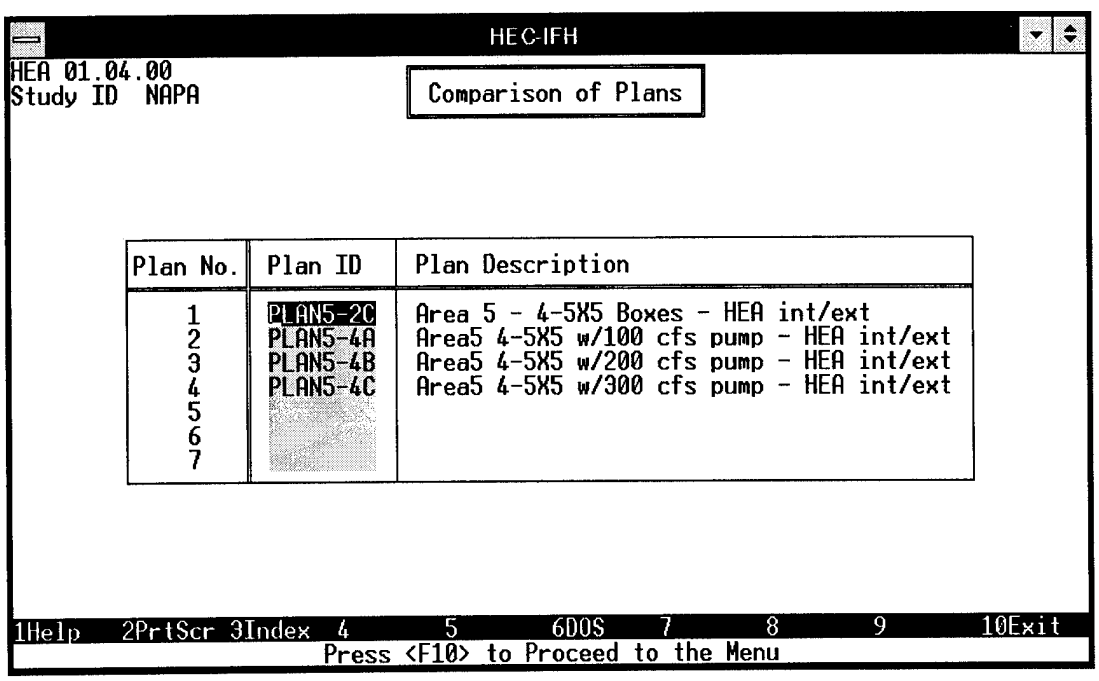

Plan No.	Plan ID	Plan Description
1	PLAN5-2C	Area 5 - 4-5X5 Boxes - HEA int/ext
2	PLAN5-4A	Area5 4-5X5 w/100 cfs pump - HEA int/ext
3	PLAN5-4B	Area5 4-5X5 w/200 cfs pump - HEA int/ext
4	PLAN5-4C	Area5 4-5X5 w/300 cfs pump - HEA int/ext
5		
6		
7		

Figure 42. HEA Plans for Evaluating Pumping Capacity

d. Nonstructural Measures. Temporary evacuation, relocation, flood proofing, and other non-structural measures that reduce susceptibility to damage, as well as the increase in available storage, will be evaluated by the district and considered in the final recommended plan.

HEC-IFH

HEA 01.04.00
Study ID NAPA

Comparison of Plans

B. Maximum Interior Elevation-Frequency

Plan ID	Peak Elevation (ft) vs. Percent Chance Exceedance							
	50%	20%	10%	4%	2%	1%	0.2%	SPF
PLAN5-2C	9.54	11.51	13.01	14.33	15.62	17.29	19.49	0.00
PLAN5-4A	9.54	11.51	13.01	13.80	15.05	16.48	19.15	0.00
PLAN5-4B	9.54	11.51	13.00	13.56	14.52	15.93	18.79	0.00
PLAN5-4C	9.54	11.51	12.99	13.54	14.15	15.54	18.57	0.00

1Help 2PrtScr 3 4 5 6DOS 7 8 9Plot 10Exit

Press <F10> to Return

Figure 43. Stage-Frequency Relationships for Evaluating Pumping Capacity

e. Final Plan Selection. Other social, institutional, and environmental issues, including the management of future development, and flood warning and preparedness programs, are evaluated in the final plan selection for each interior area.

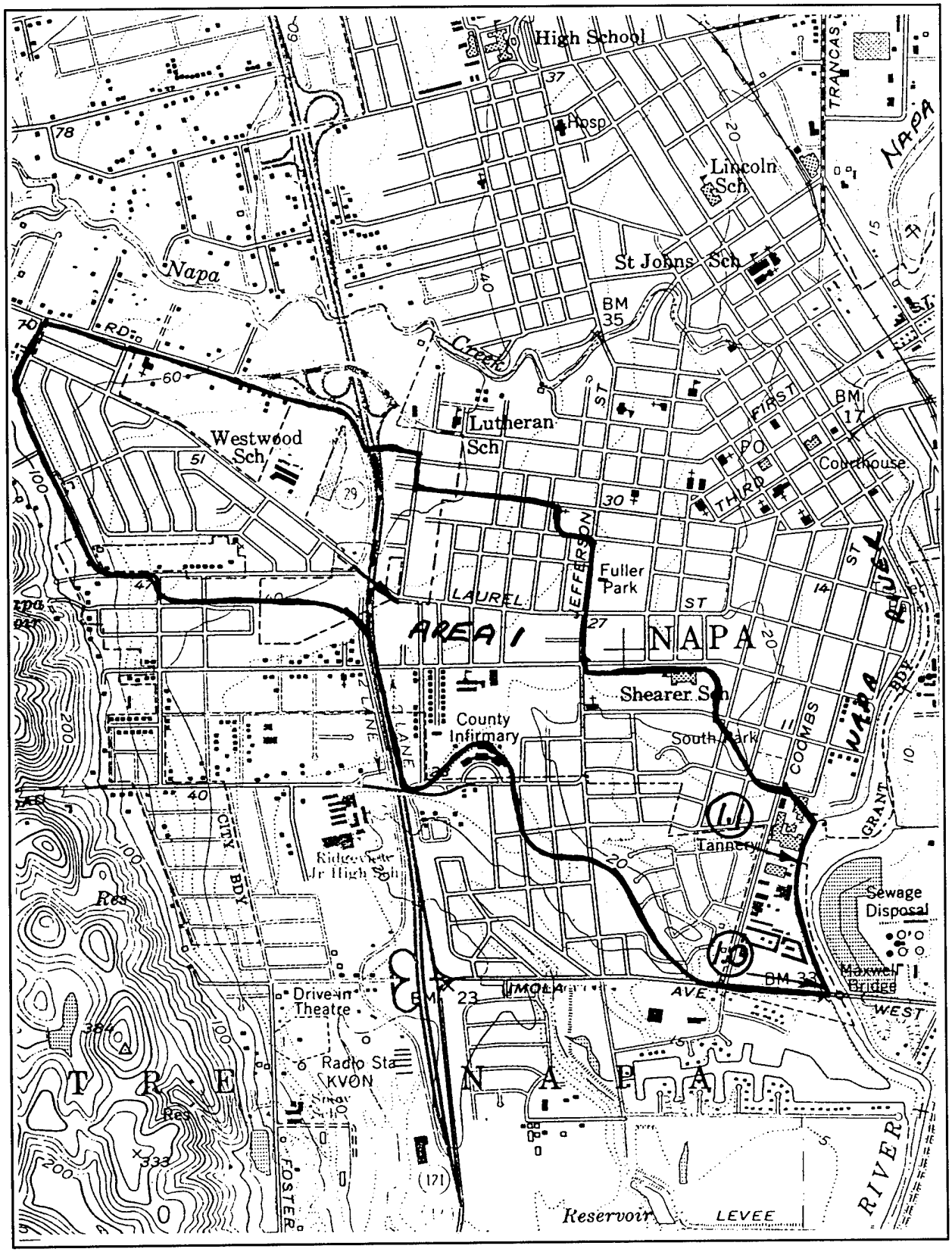

Plate 1 Napa Interior Area 1

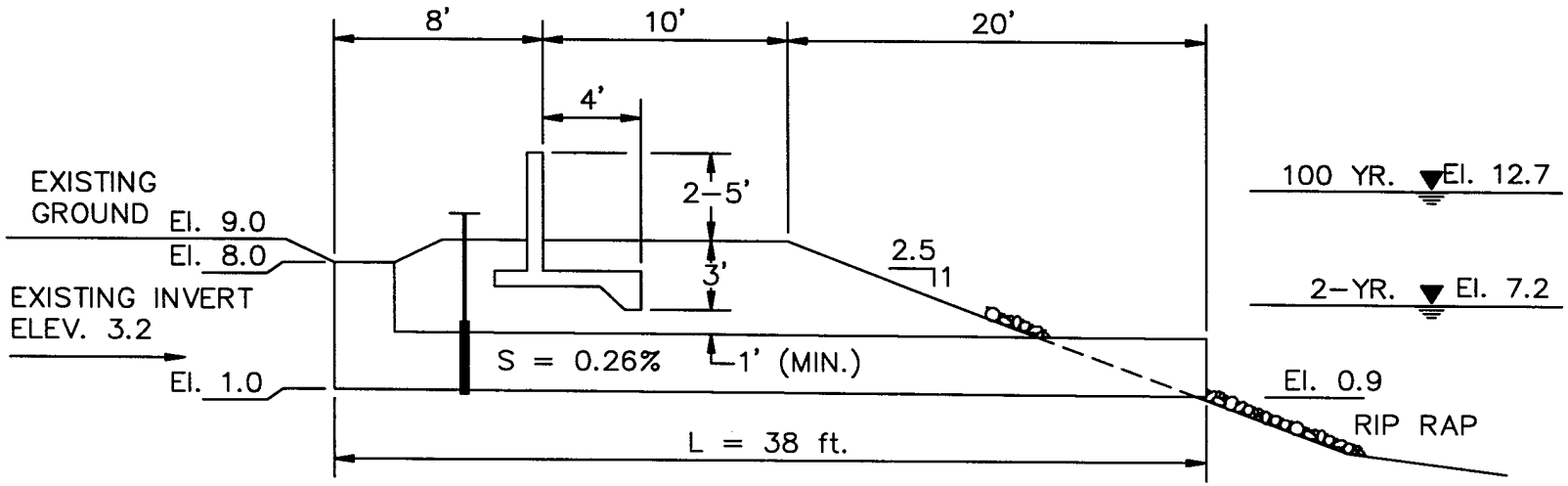

TYPICAL SET–BACK FLOOD WALL

AREA 1

EXISTING OUTLET:	30" RCP
DESIGNATION:	1.0 (PRIMARY)
LOCATION:	IMOLA AVE.
BANK:	WEST
STATION:	704.00

DAMAGE BEGINS AT 9.5ft.

- Min. Facility: 1–4'x6' box culvert W/Drop Inlet.
- Primary & Secondary outlets are hydraulically connected by ditch or culvert.

Plate 2

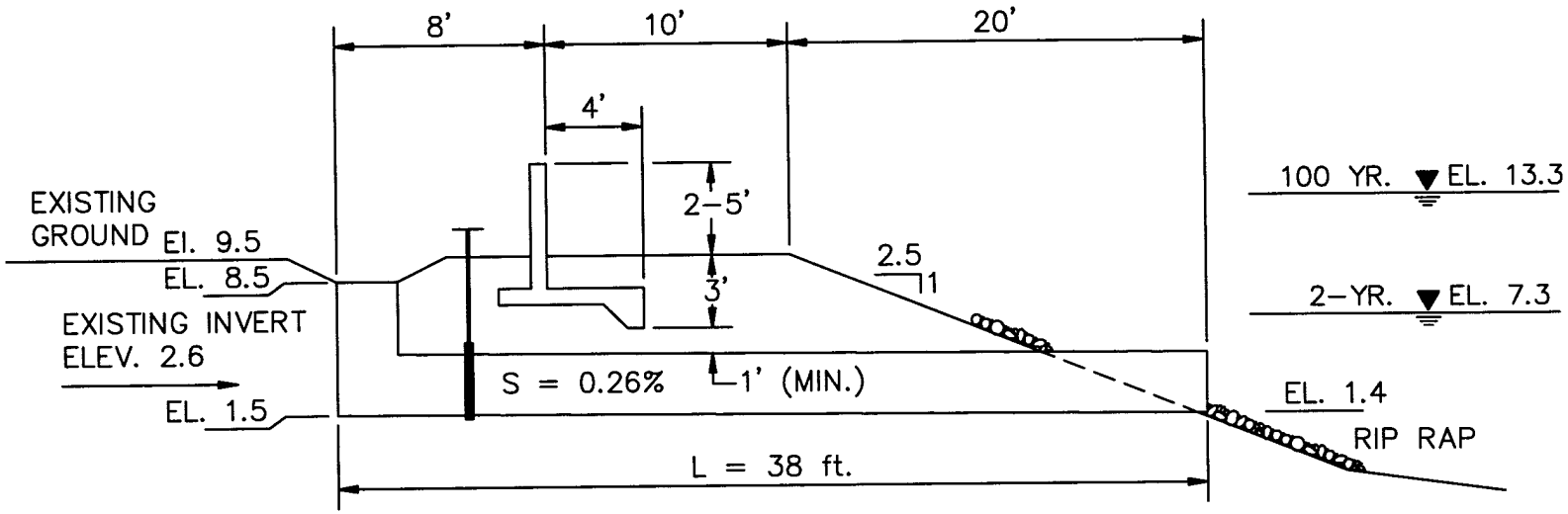

TYPICAL SET-BACK FLOOD WALL

AREA 1

EXISTING OUTLET: 54" RCP (USE 4'X4' BOX)
DESIGNATION: 1.1 (SECONDARY)
LOCATION: COOMBS
BANK: WEST
STATION: 716.5

Connected Hydraulically to Primary.
Minimum Facility: is 1-4'x4'
Box culvert W/drop Inlet.

Plate 3

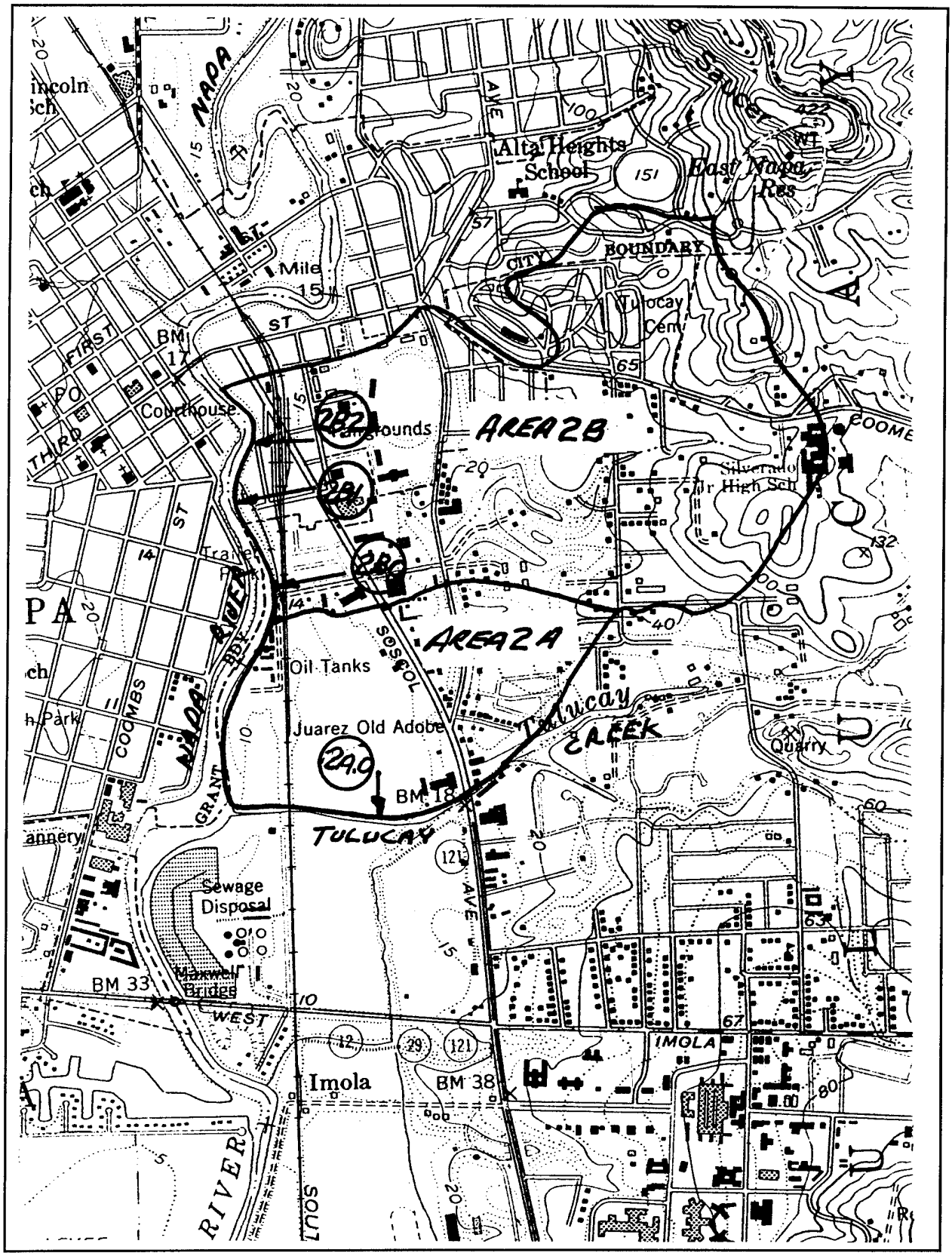

Plate 4 Napa Interior Area 2

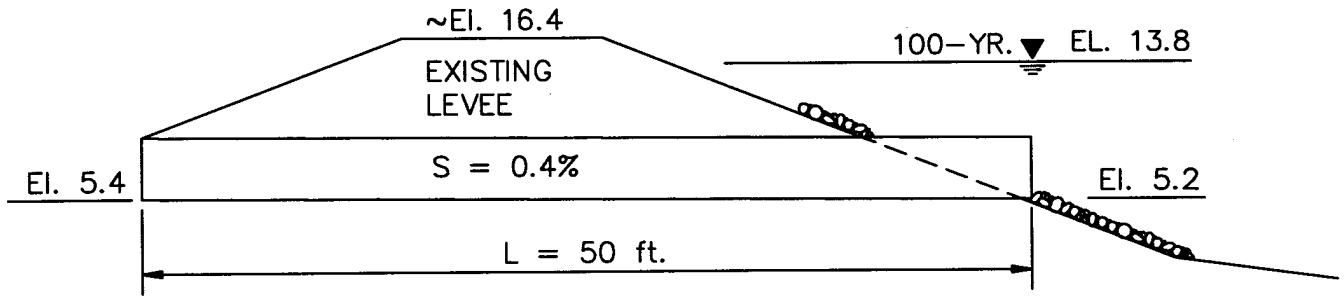

U/S MOUTH OF TULUCAY CREEK

AREA 2A

DESIGNATION: 2A.0 (PRIMARY)
LOCATION: TULUCAY CREEK
BANK: NORTH
STATION: 727.0 (mouth of Tulucay Creek)

– Damage begins at 10.0 ft.
– Min. Facility: 1–4x4 Box culvert

Plate 5

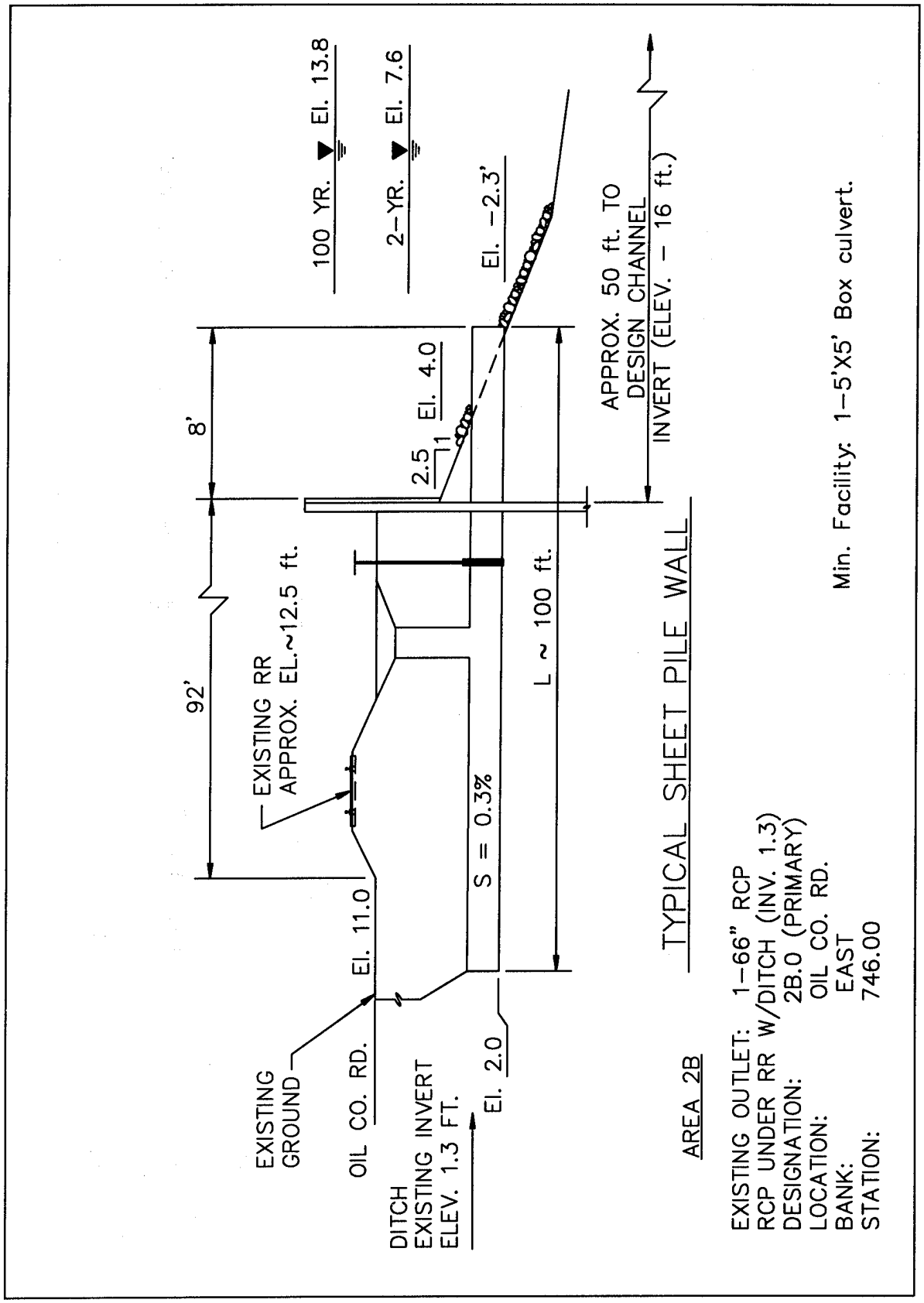
100 YR. El. 13.8
2-YR. El. 7.6
El. -2.3'
El. 4.0
2.5
1
8'
92'
APPROX. 50 ft. TO
DESIGN CHANNEL
INVERT (ELEV. - 16 ft.)
EXISTING RR
APPROX. EL.~12.5 ft.
L ~ 100 ft.
S = 0.3%
El. 11.0
EXISTING
GROUND
OIL CO. RD.
DITCH
EXISTING INVERT
ELEV. 1.3 FT.
El. 2.0
TYPICAL SHEET PILE WALL
Min. Facility: 1-5'X5' Box culvert.
AREA 2B
EXISTING OUTLET: 1-66" RCP
RCP UNDER RR W/DITCH (INV. 1.3)
DESIGNATION: 2B.0 (PRIMARY)
LOCATION: OIL CO. RD.
BANK: EAST
STATION: 746.00

Plate 6

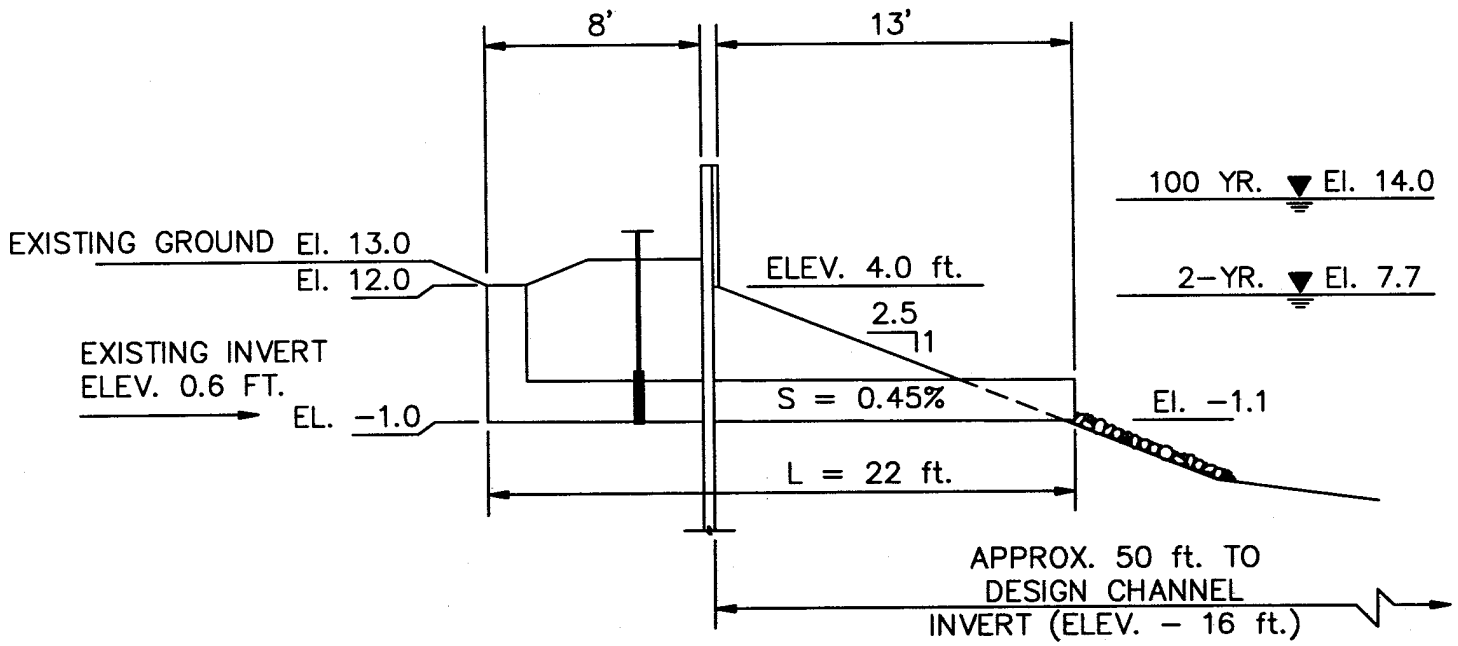

TYPICAL SHEET PILE WALL

AREA 2B

EXISTING OUTLET: 48" RCP
DESIGNATION: 2B.1 (SECONDARY)
LOCATION: EIGHT ST.
BANK: EAST
STATION: 754.00

Min. Facility: 1-48" RCP W/Drop inlet.

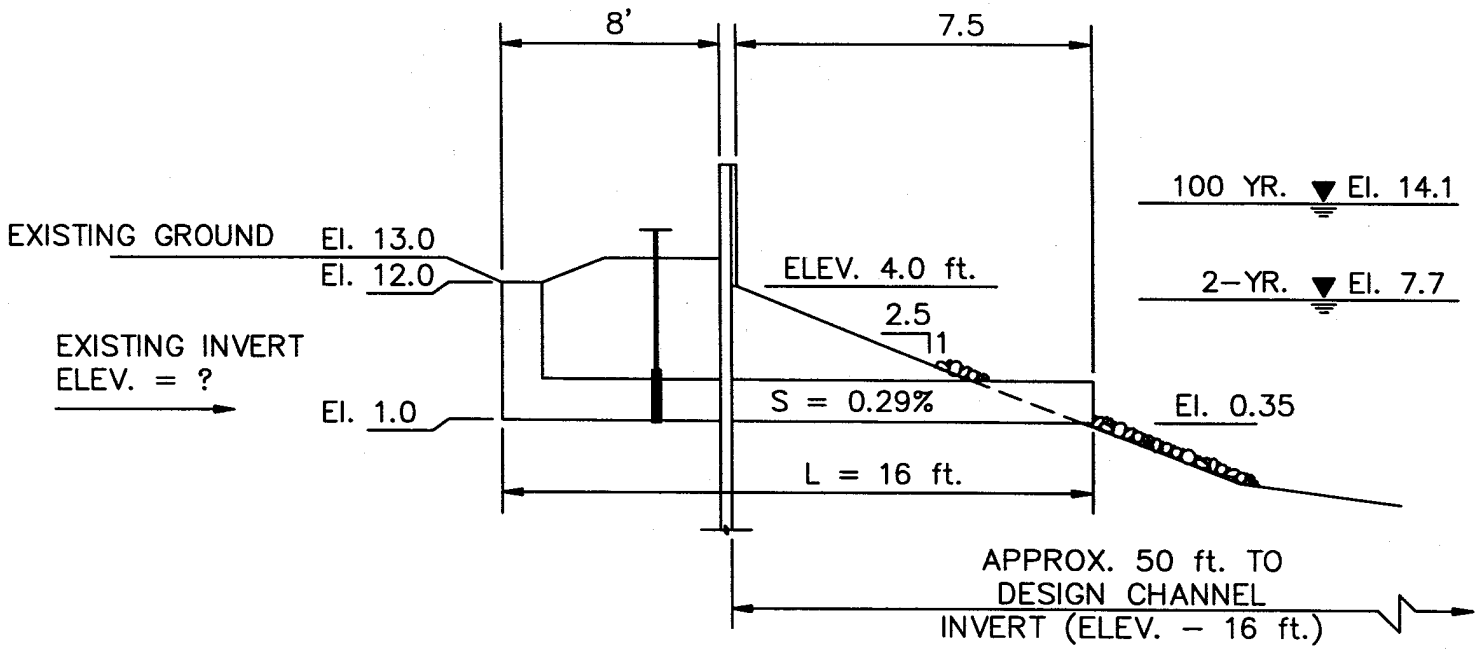

TYPICAL SHEET PILE WALL

AREA 2B

EXISTING OUTLET: 6" + 12" (USE 24" MIN.)
DESIGNATION: 2B.2
LOCATION: SIXTH ST.
BANK: EAST
STATION: 762.00

Min. Facility: 1-24" RCP W/Drop inlet.

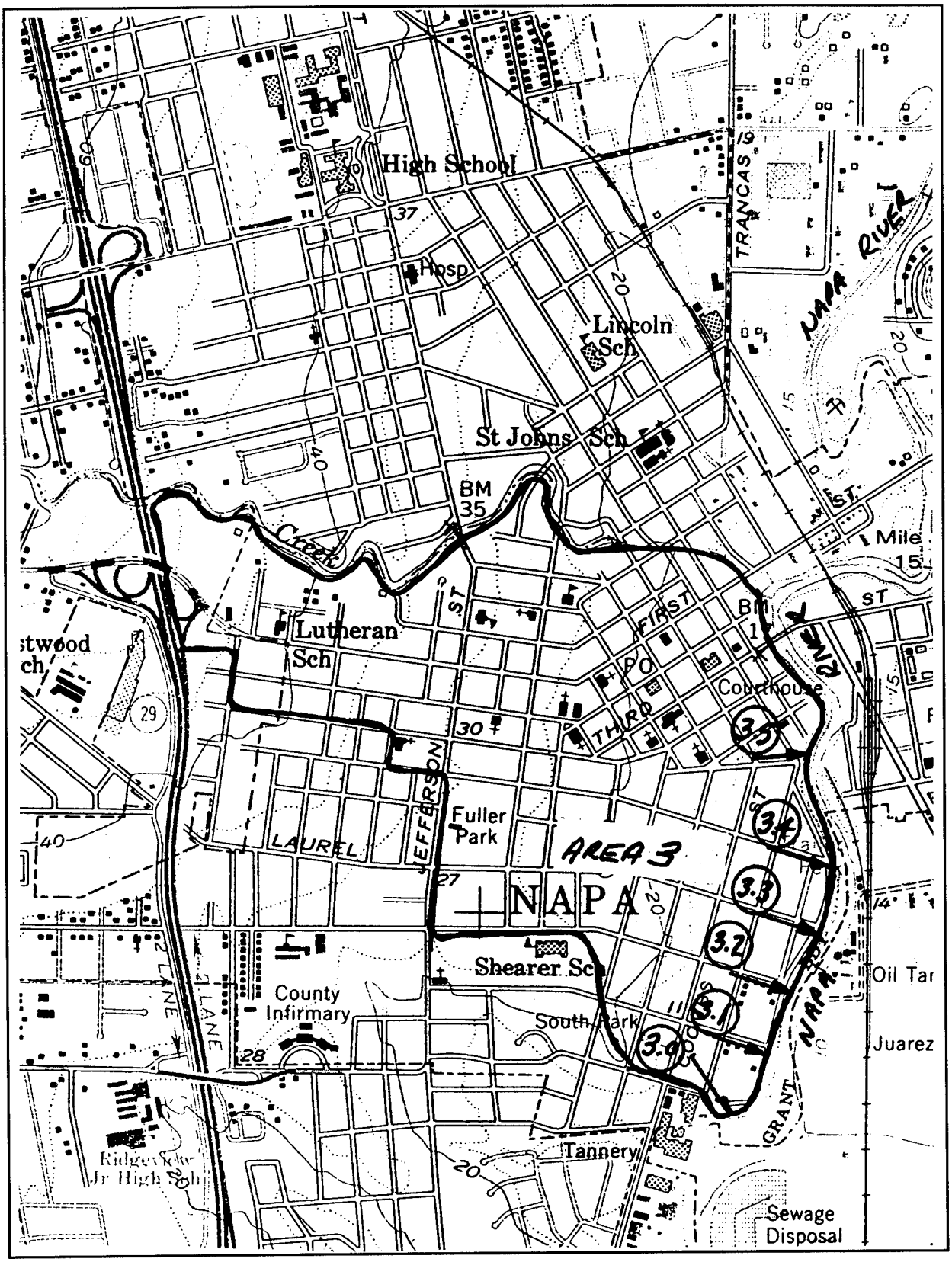

Plate 9 Napa Interior Area 3

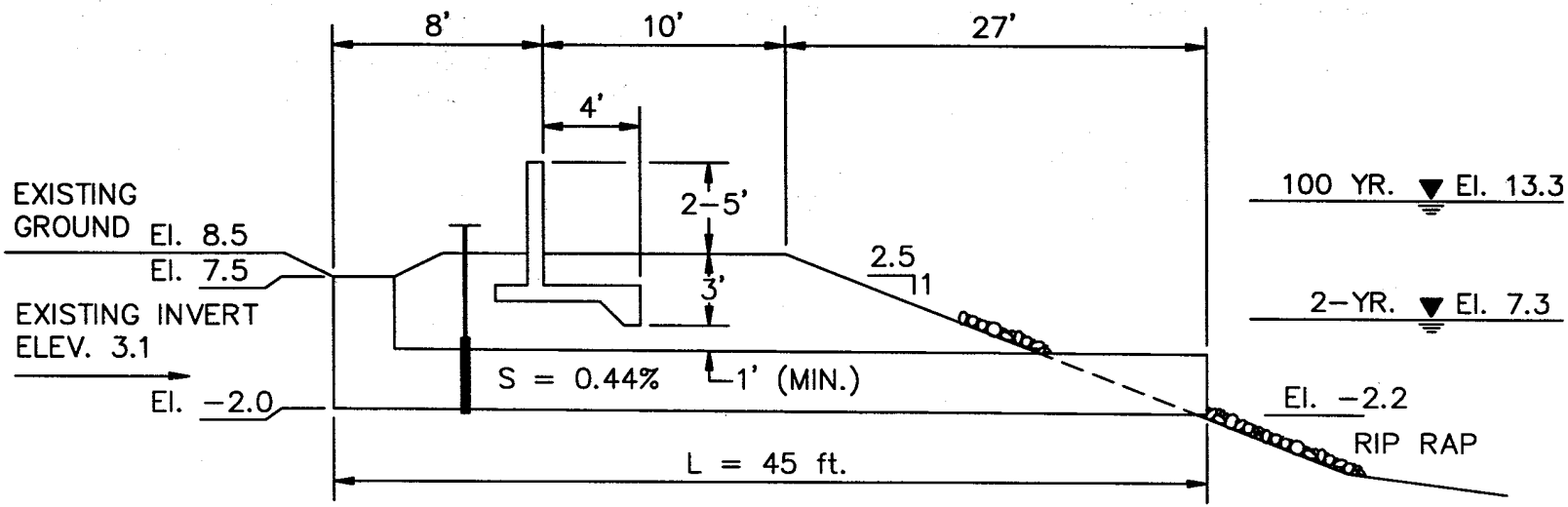

TYPICAL SET-BACK FLOOD WALL

AREA 3

EXISTING OUTLET: 18" RCP INV
EL.=3.1 ft. (USE 36" MIN.)
DESIGNATION: 3.0 (PRIMARY)
LOCATION: ASH ST.
BANK: WEST
STATION: 720.0

Min. Facility: 1-36" RCP W/Drop Inlet.
All outlets connected hydraulically
by ditch or culvert along L-O-P.

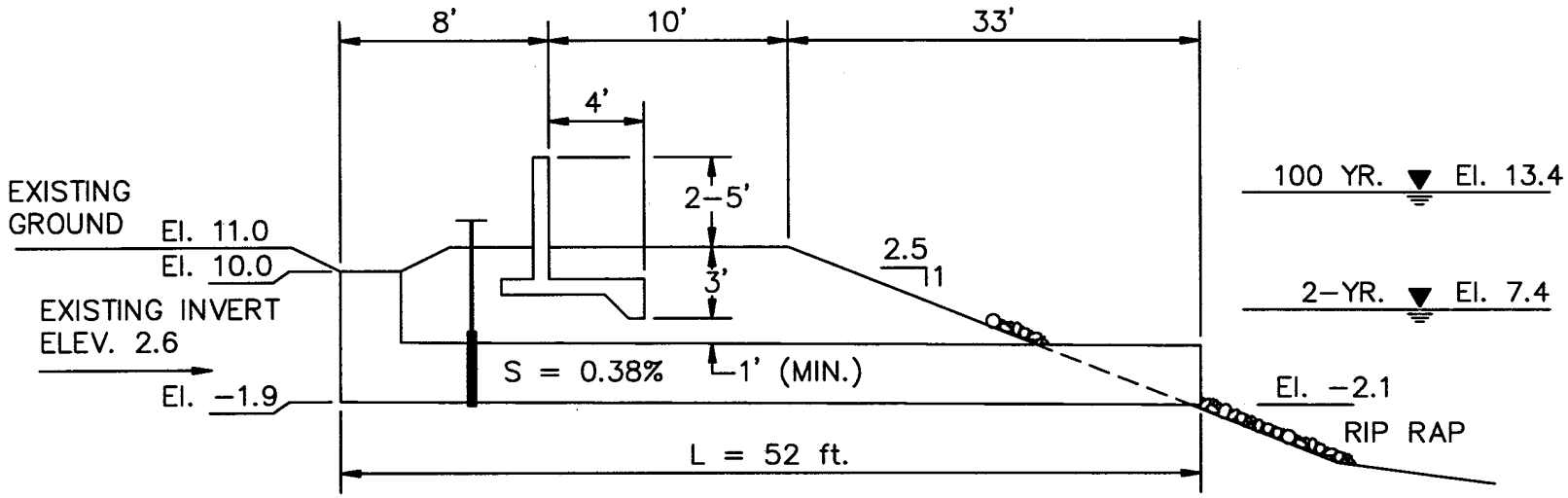

TYPICAL SET-BACK FLOOD WALL

AREA 3

EXISTING OUTLET: 1-30" RCP INV EL.= 2.6 ft.
DESIGNATION: 3.1 (SECONDARY)
LOCATION: ELM ST.
BANK: WEST
STATION: 731.0

Min. Facility: 1-30" RCP W/Drop Inlet connected to primary outlet.

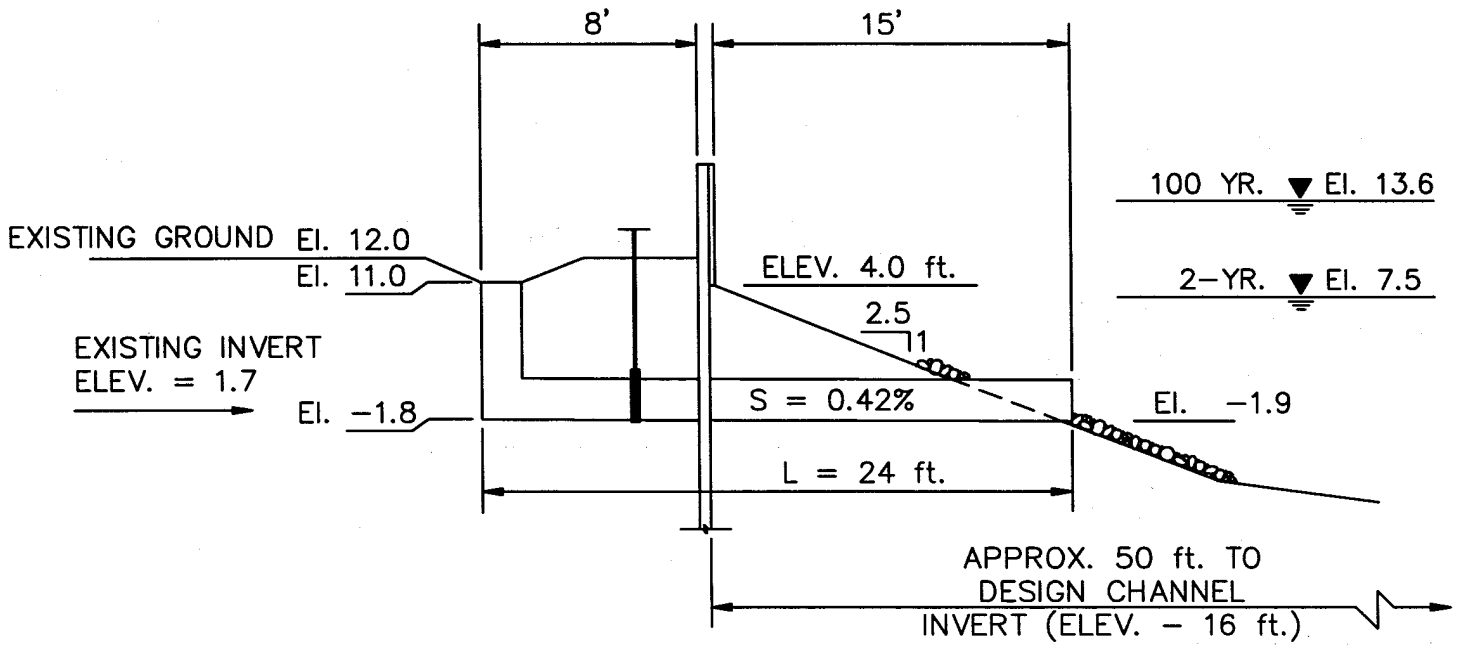

TYPICAL SHEET PILE WALL

AREA 3

EXISTING OUTLET: 60" RCP INV.
ELV.=1.7 ft.
DESIGNATION: 3.2 (SECONDARY)
LOCATION: PINE ST.
BANK: WEST
STATION: 736.75

Min. Facility: 1-4.5'x4.5' box W/Drop inlet connected to primary outlet.

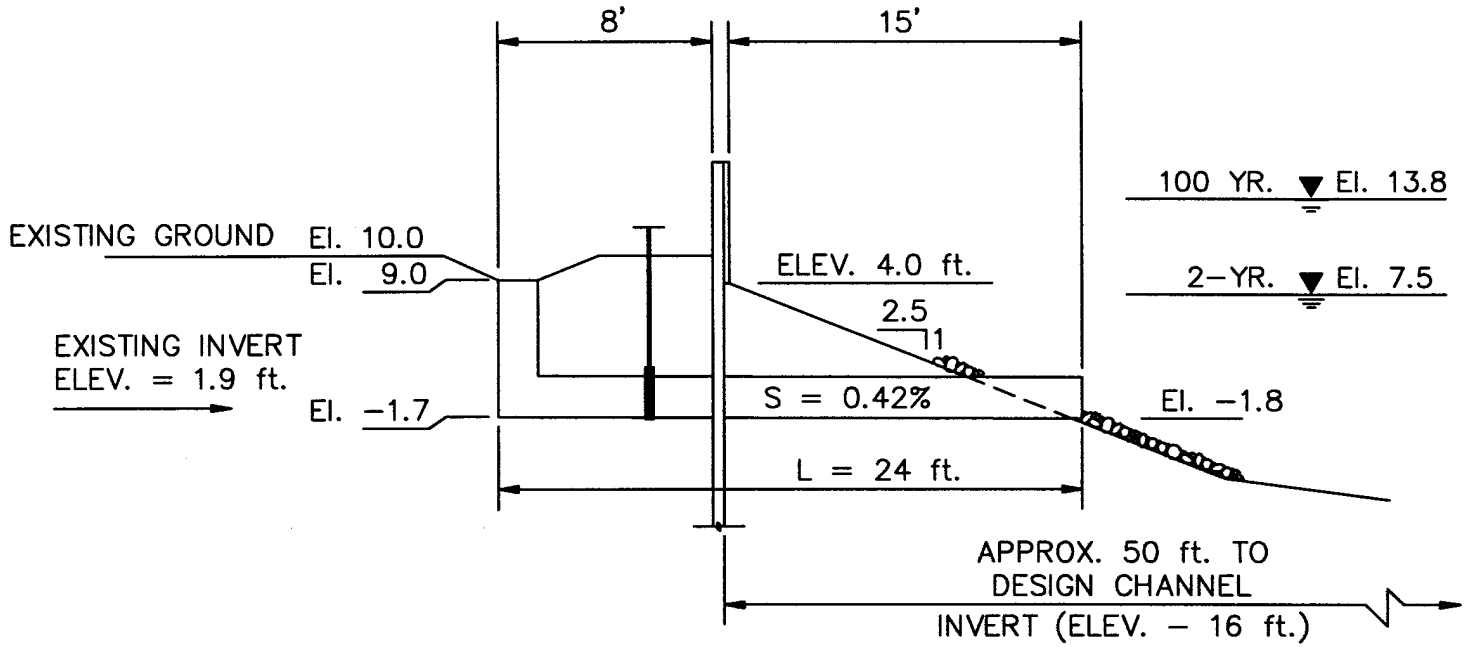

TYPICAL SHEET PILE WALL

AREA 3

EXISTING OUTLET: 30" RCP INV. ELV.=1.9 ft.
DESIGNATION: 3.3 (SECONDARY)
LOCATION: LAURAL ST.
BANK: WEST
STATION: 742.00

Min. Facility: 1-30: RCP W/Drop inlet connected to primary outlet.

NOTE: For analysis, outlets at 3.3 & 3.4 (Oak st.) were combined at this location.

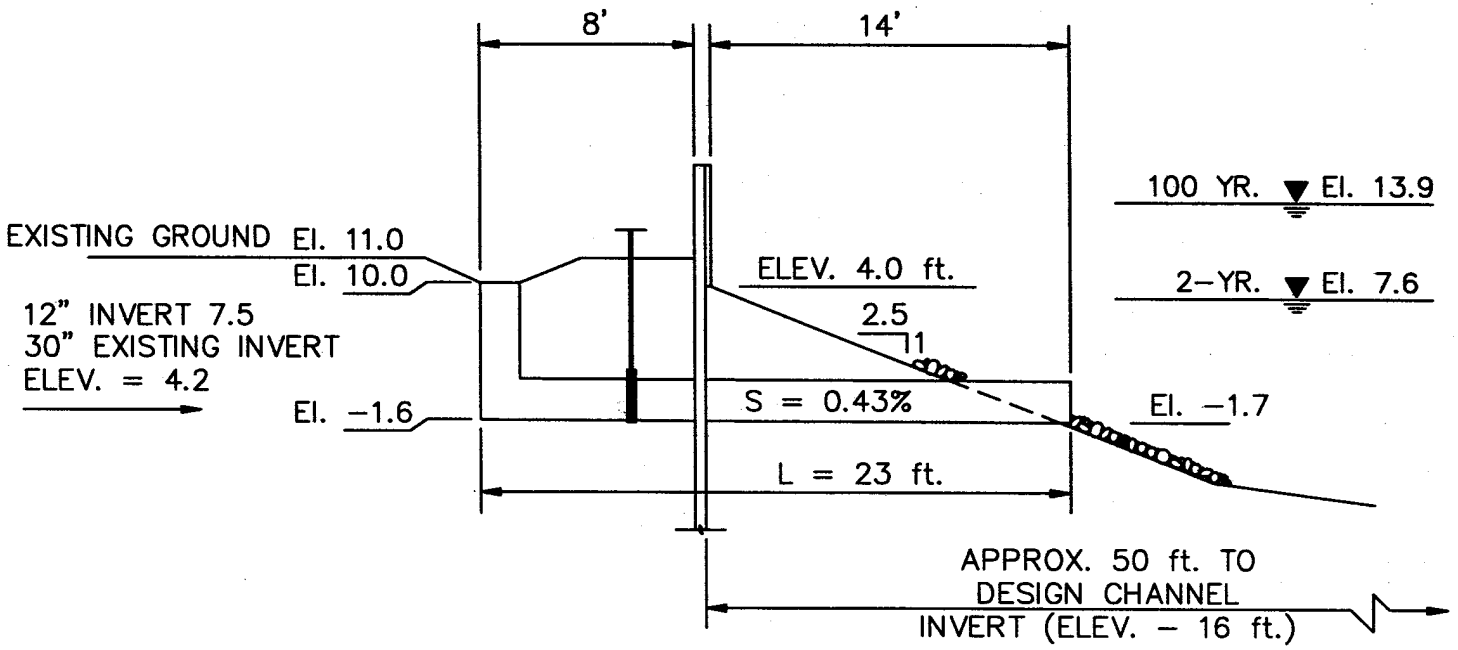

TYPICAL SHEET PILE WALL

AREA 3

EXISTING OUTLET:	30"+12"
DESIGNATION:	3.4
LOCATION:	OAK ST.
BANK:	WEST
STATION:	748.00

MIN. FACILITY: 1-36" RCP W/DROP INLET CONNECTED TO PRIMARY OUTLET.

NOTE: This structure combined with structure 3.3 at Laural Street (Used 1-48" at Laural)

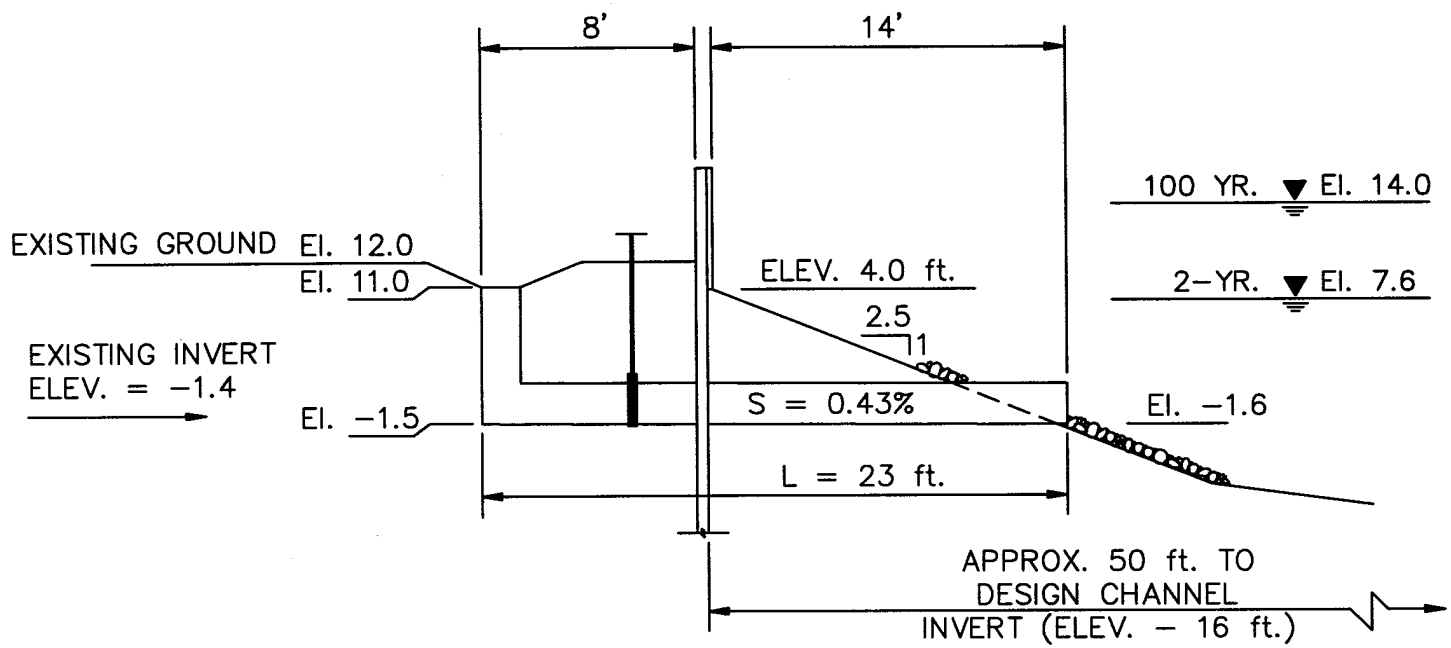

TYPICAL SHEET PILE WALL

AREA 3

EXISTING OUTLET: 54" RCP
DESIGNATION: 3.5 (SECONDARY)
LOCATION: DIVISION ST.
BANK: WEST
STATION: 757.00

Min.Facility: 1-4'X4' Box W/Drop inlet connected to primary outlet.

Plate 16 Napa Interior Area 4

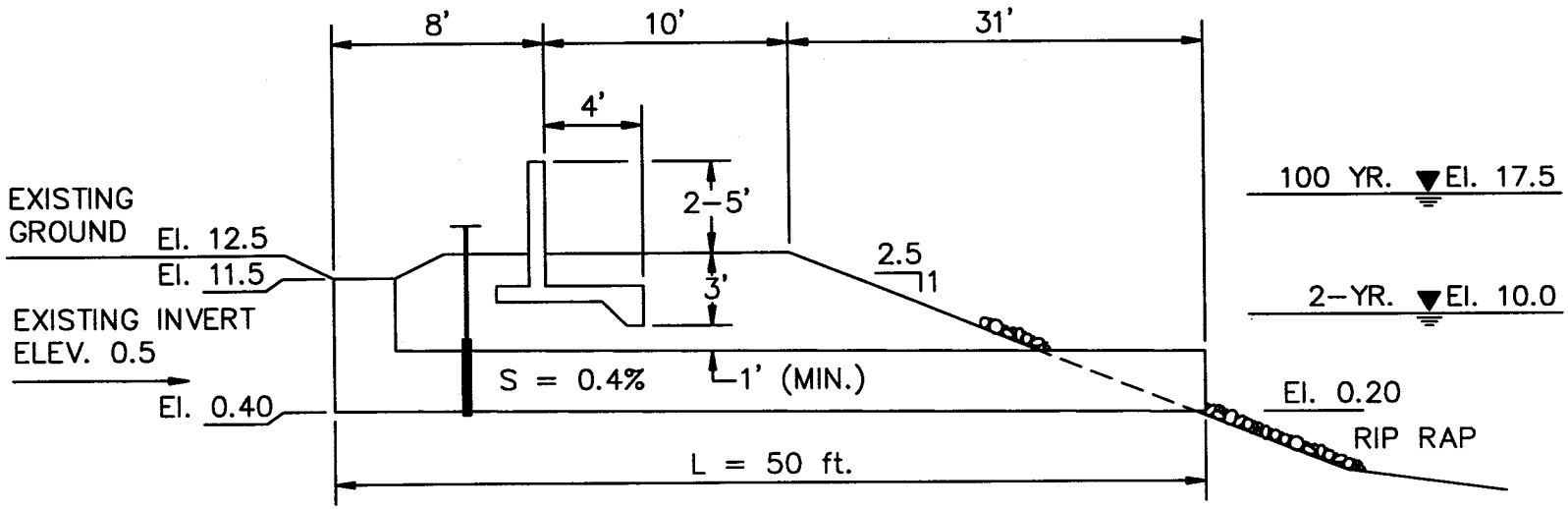

TYPICAL SET-BACK FLOOD WALL

AREA 4A

EXISTING OUTLET: 30" RCP (USE 36" MIN.)
DESIGNATION: 4A.0 (PRIMARY)
LOCATION: TAYLOR ST.
BANK: EAST
STATION: 276+515.5=791.50

Min. Facility: 1-36" RCP W/Drop Inlet.

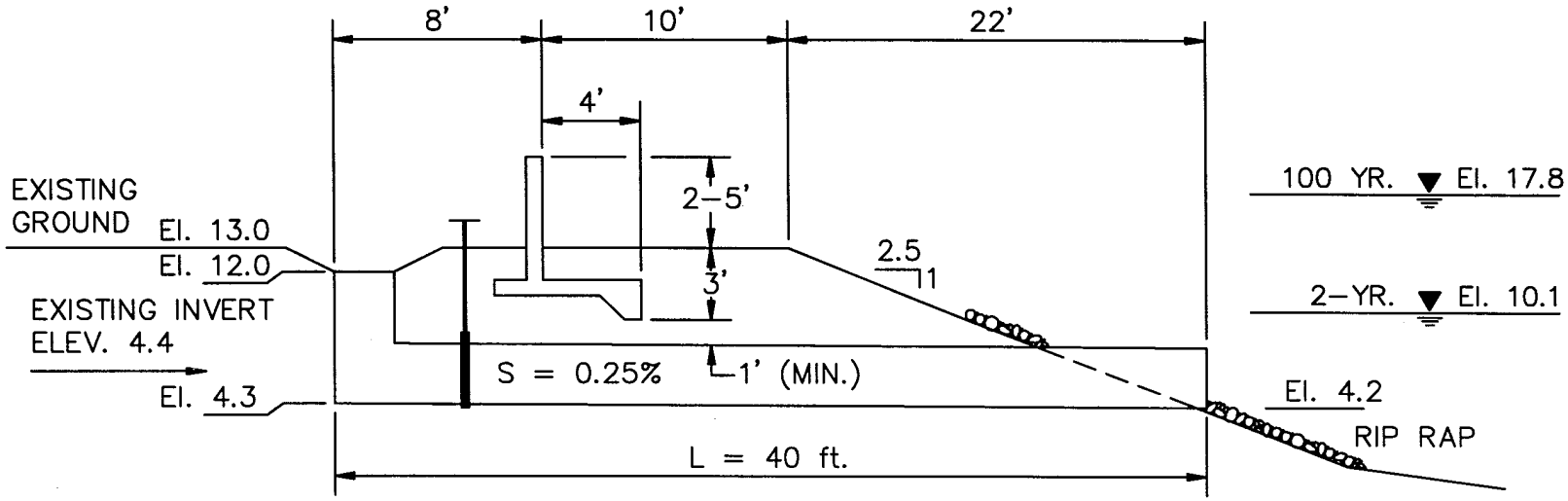

TYPICAL SET–BACK FLOOD WALL

AREA 4A

EXISTING OUTLET: 12"
DESIGNATION: 4A.1 (SECONDARY)
LOCATION: POST ST.
BANK: EAST
STATION: 279.00+515.50=794.50

Min. Facility: 1–24" RCP W/Drop Inlet.
NOTE: – All outlets connected to primary
– Combined with 24" at Second st. (For Analysis only)

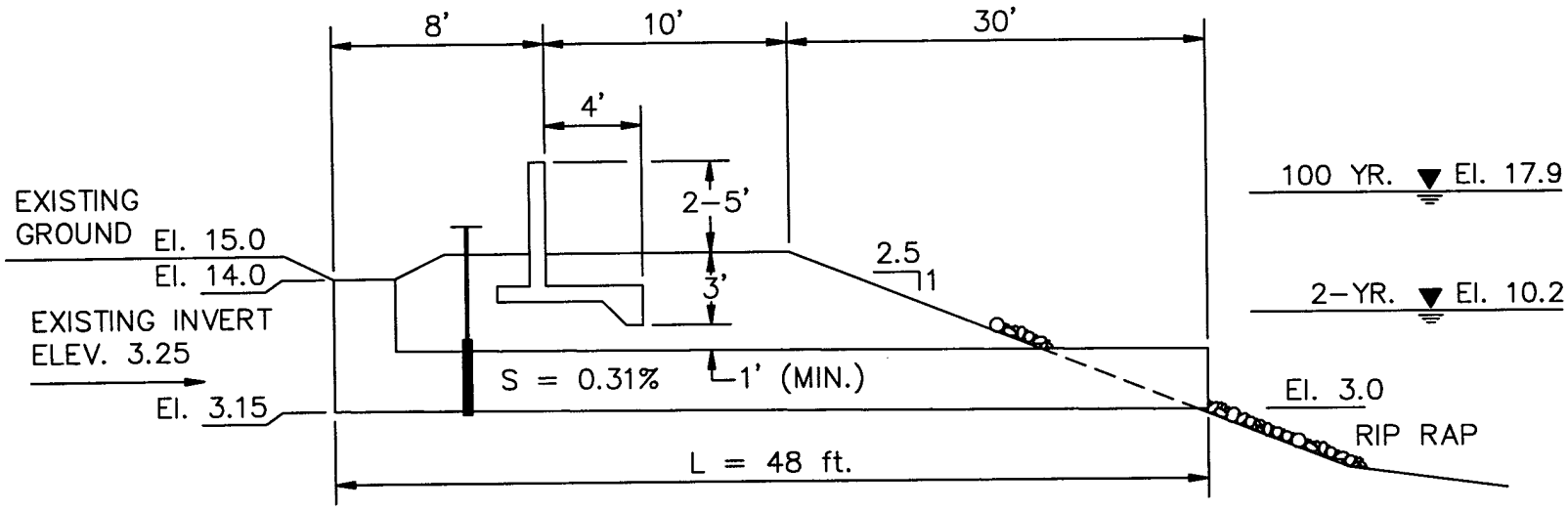

TYPICAL SET-BACK FLOOD WALL

AREA 4A

EXISTING OUTLET:	24" RCP	Min. Facility:	1-24" RCP W/Drop Inlet
DESIGNATION:	4A.2 (SECONDARY)		This outlet connected to primary
LOCATION:	SECOND ST.		combined with existing 12" outlet
BANK:	EAST		at Post St. (4A.1).
STATION:	281.00+515.50=796.50		(For analysis only)

Plate 19

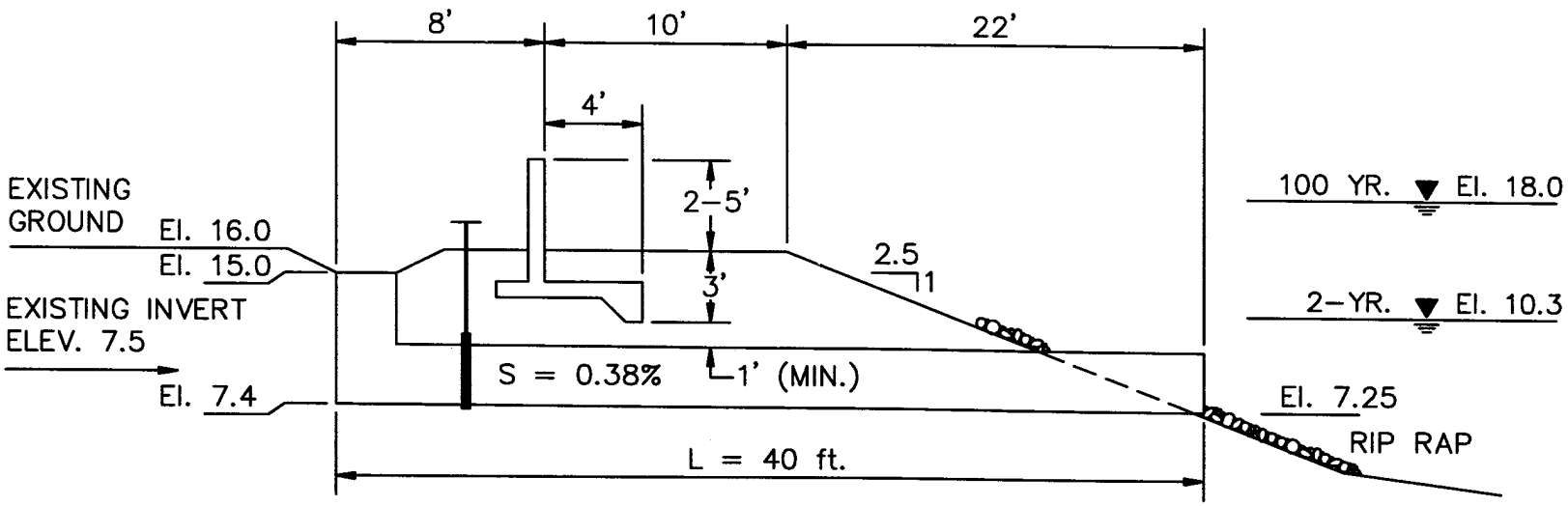

TYPICAL SET-BACK FLOOD WALL

AREA 4A

EXISTING OUTLET: 1-13" RCP
DESIGNATION: 4A.3
LOCATION: FIRST ST.
BANK: EAST
STATION: 285.00+515.50=800.50

Min. Facility: 1-24" RCP W/Drop Inlet. This outlet connected to primary combine with existing 10" pipe at Clay St. (4A.4). (For analysis only)

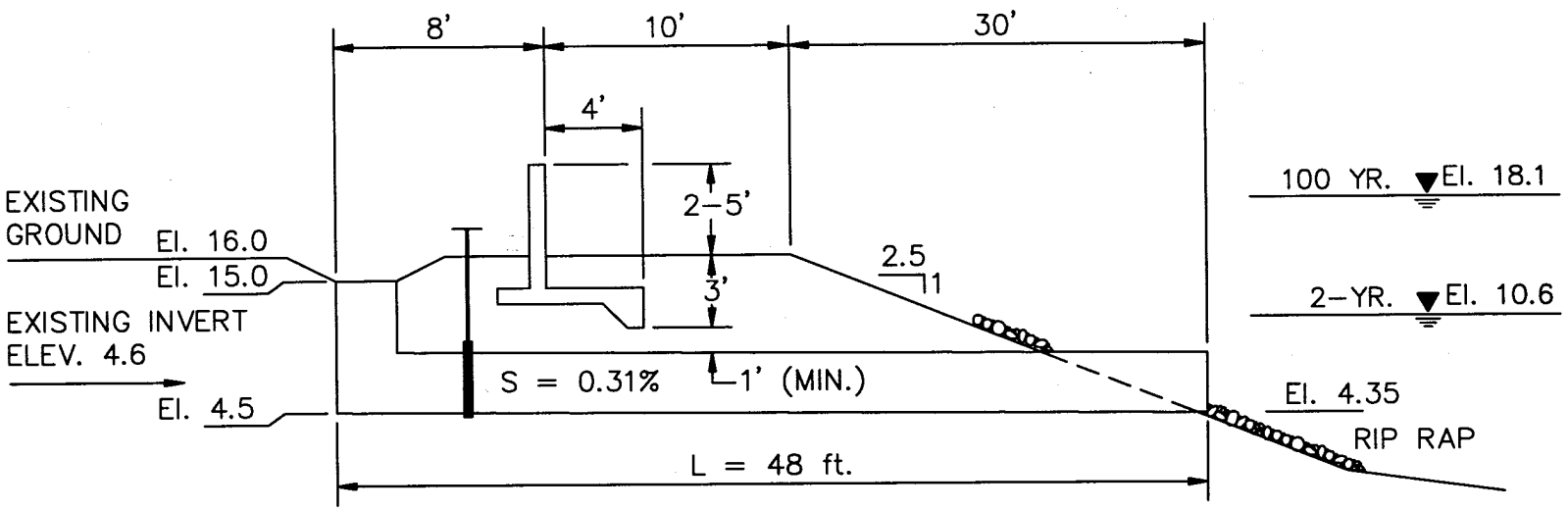

TYPICAL SET-BACK FLOOD WALL

AREA 4A

EXISTING OUTLET: 1-10" RCP
DESIGNATION: 4A.4
LOCATION: CLAY ST.
BANK: EAST
STATION: 287.50+515.50=803.00

Min. Facility: 1-24" RCP W/Drop Inlet. this outlet connected to primary combine with 1-18" at First St. (For analysis only)

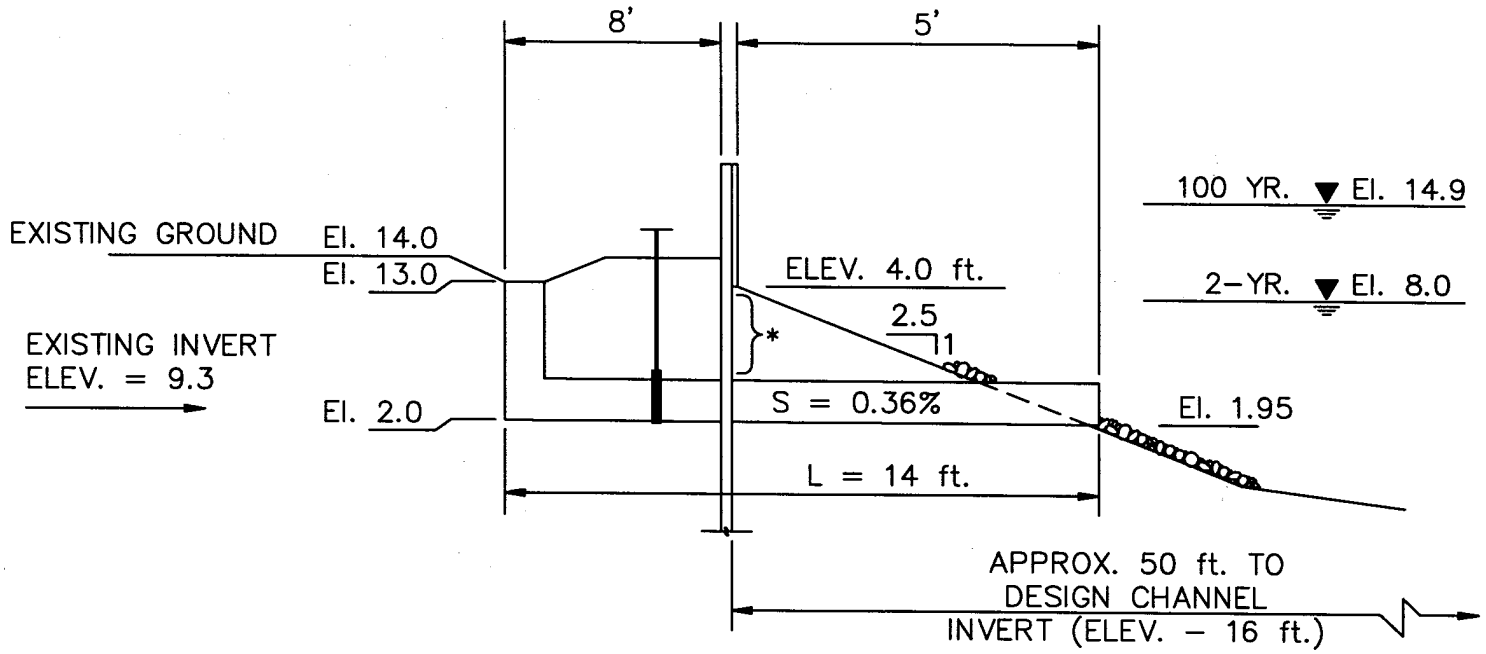

TYPICAL SHEET PILE WALL

AREA 4

EXISTING OUTLET: 18" RCP (USE 24" MIN.)
DESIGNATION: 4.99
(NOT ANALYZED AS PRIMARY
OR SECONDARY OUTLET)

LOCATION: THIRD ST.
BANK: EAST
STATION: 256.00+515.50=771.50

Min. Facility: 1-24" RCP W/DROP INLET.
Separate outlet-not connected
to other outlets in area.

* Culvert exits just below inside
wall facing (may vary).

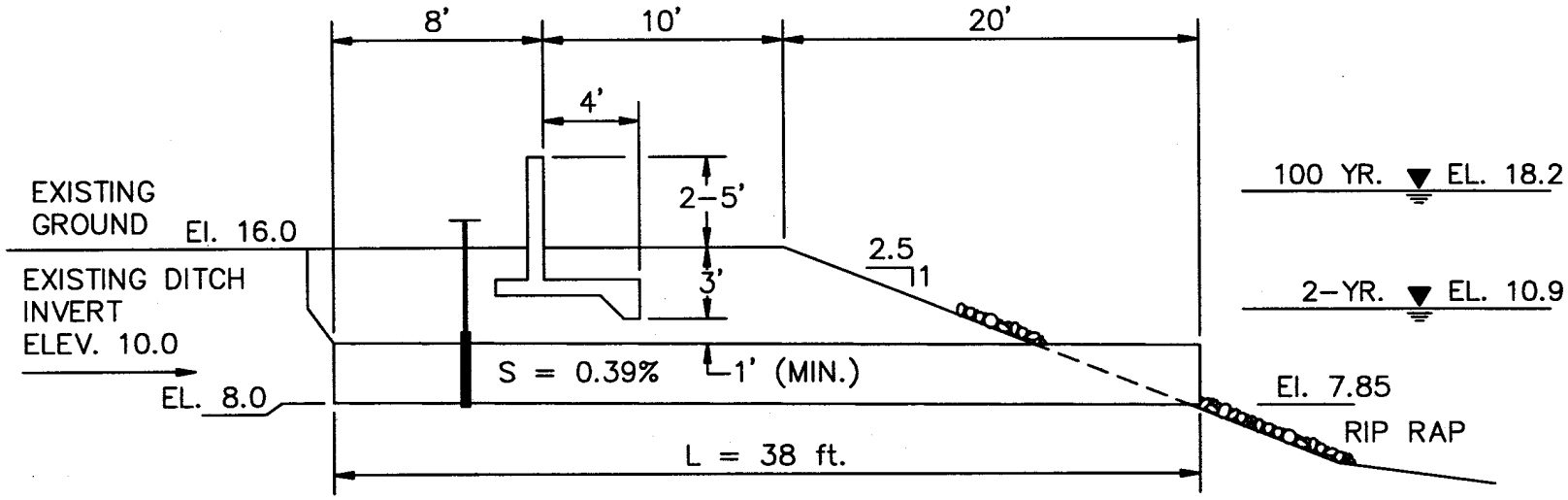

TYPICAL SET-BACK FLOOD WALL

AREA 4B

EXISTING OUTLET: DITCH (USE 1-48" RCP)
DESIGNATION: 4B.0 (PRIMARY)
LOCATION: U.S. PROJ. LIMIT OFF JUAREZ ST.
BANK: EAST
STATION: 291.01+515.50=806.50

Min. Facility: 1-48" RCP (No drop inlet)

Plate 24 Napa Interior Area 5

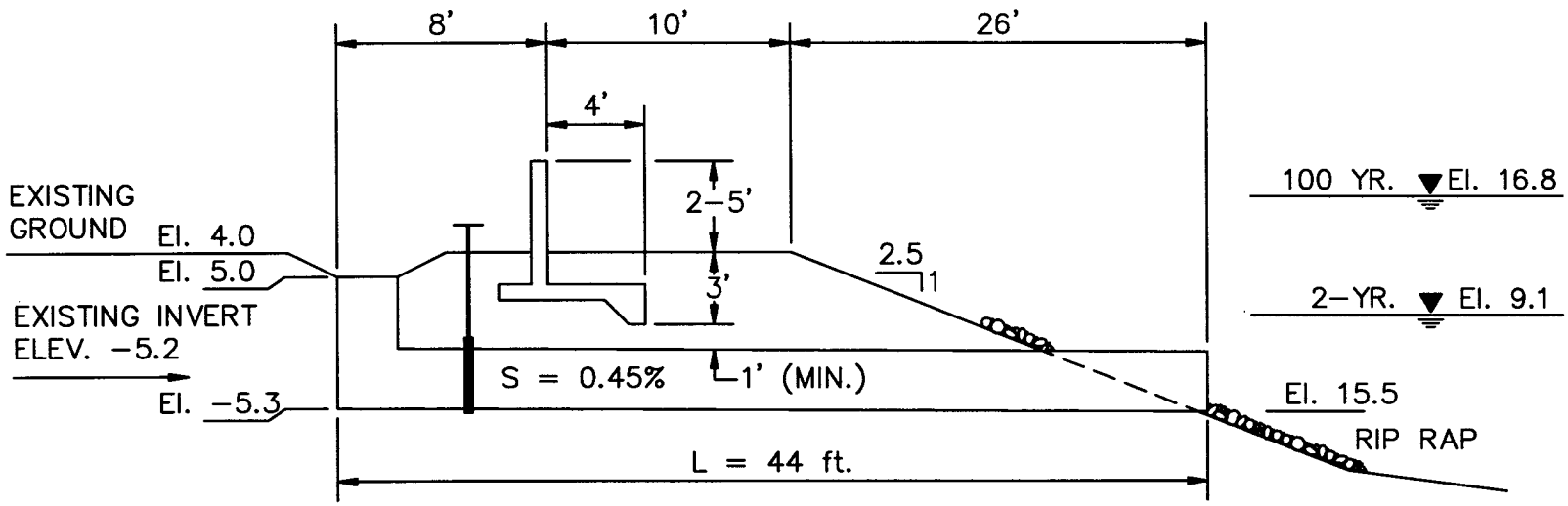

TYPICAL SET-BACK FLOOD WALL

AREA 5

EXISTING OUTLET: 42" RCP UNDER DITCH
DESIGNATION: 5.0 (PRIMARY)
LOCATION: SOSCOL AVE.
BANK: WEST
STATION: 260+513.5=781.50

Dmage begins ~ 14.0ft.

Min. Facility: DBL 5ft. x 5.5ft. Box W/Drop inlet.

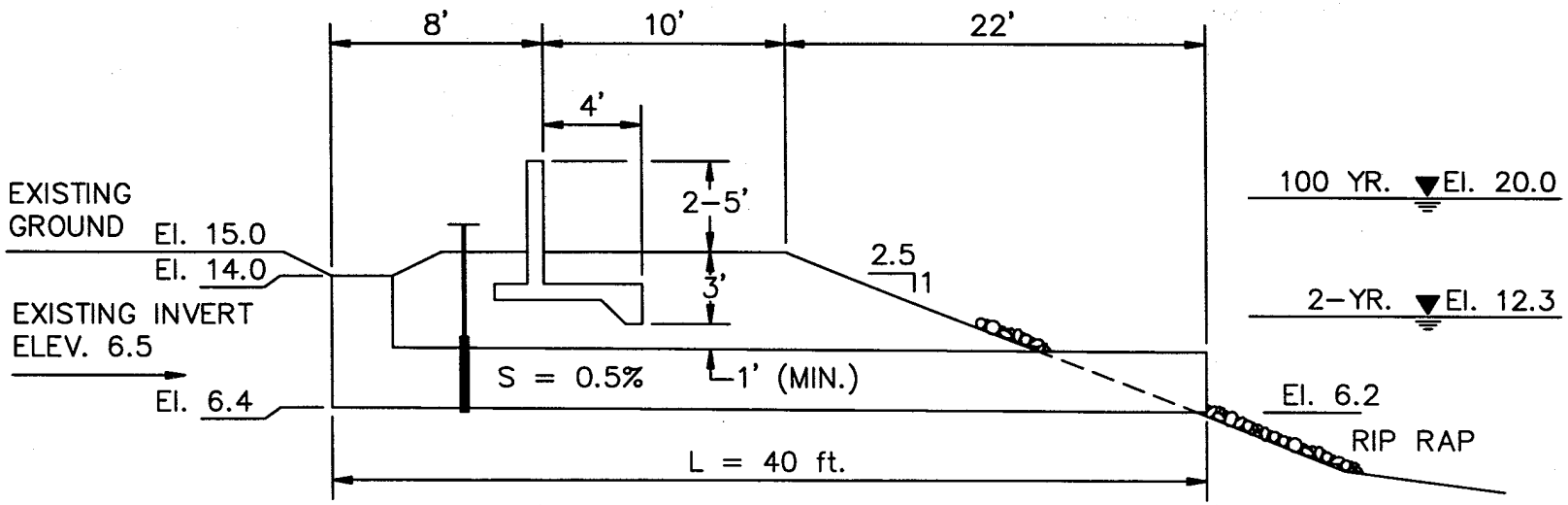

TYPICAL SET-BACK FLOOD WALL

AREA 5

EXISTING OUTLET: 24" RCP
DESIGNATION: 5.1 (SECONDARY)
LOCATION: IMPERIAL WAY
BANK: WEST
STATION: 318+513.5=831.50

Min. Facility: 1-24" RCP W/Drop Inlet.
(Not connected to primary outlet)

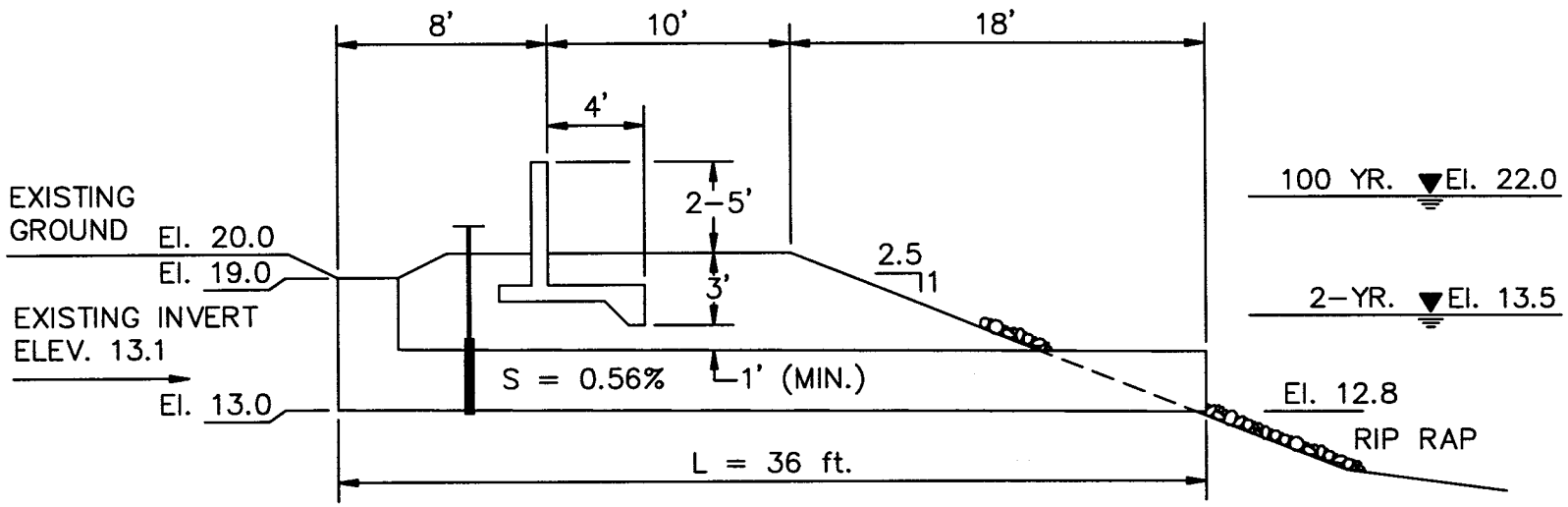

TYPICAL SET-BACK FLOOD WALL

AREA 5

EXISTING OUTLET: 18"
DESIGNATION: 5.20 (SECONDARY)
LOCATION: N. BAY DRIVE
BANK: WEST
STATION: 328+513.0=841.30

Min. Facility: 1-24" RCP W/Drop Inlet.
(Not connected to primary outlet)

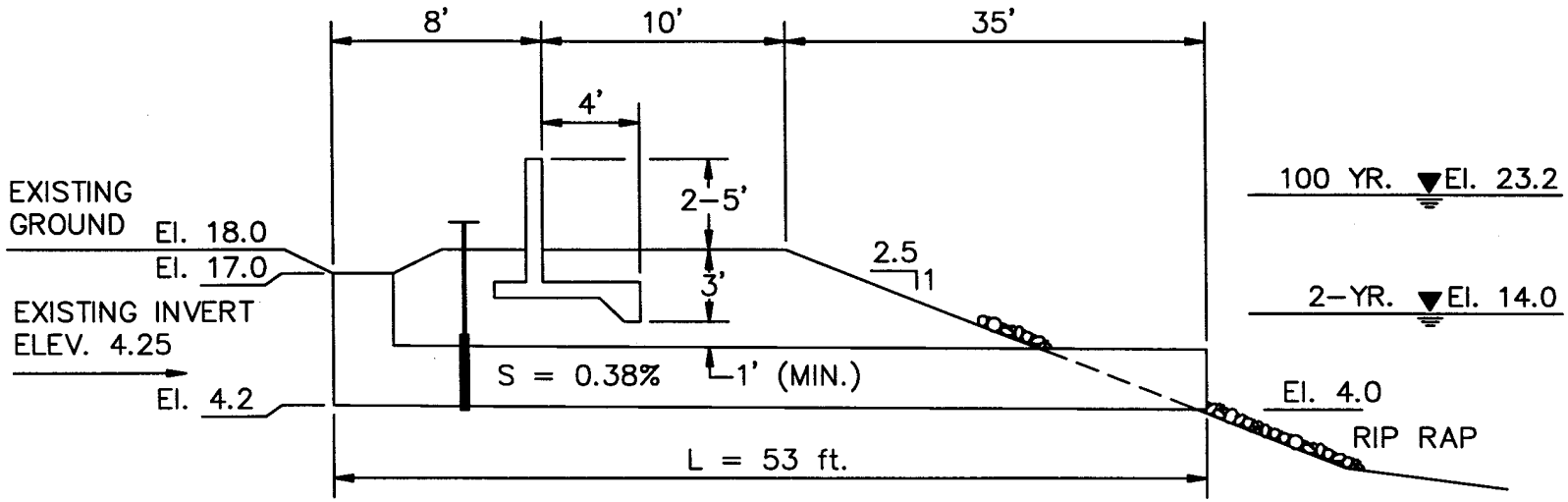

TYPICAL SET-BACK FLOOD WALL

AREA 5

EXISTING OUTLET: 30"
DESIGNATION: 5.3 (SECONDARY)
LOCATION: LINCOLN AVE.
BANK: WEST
STATION: 336+513.5=840.50

Min. Facility: 1-30" RCP W/Drop Inlet.
(Not connected to primary outlet)

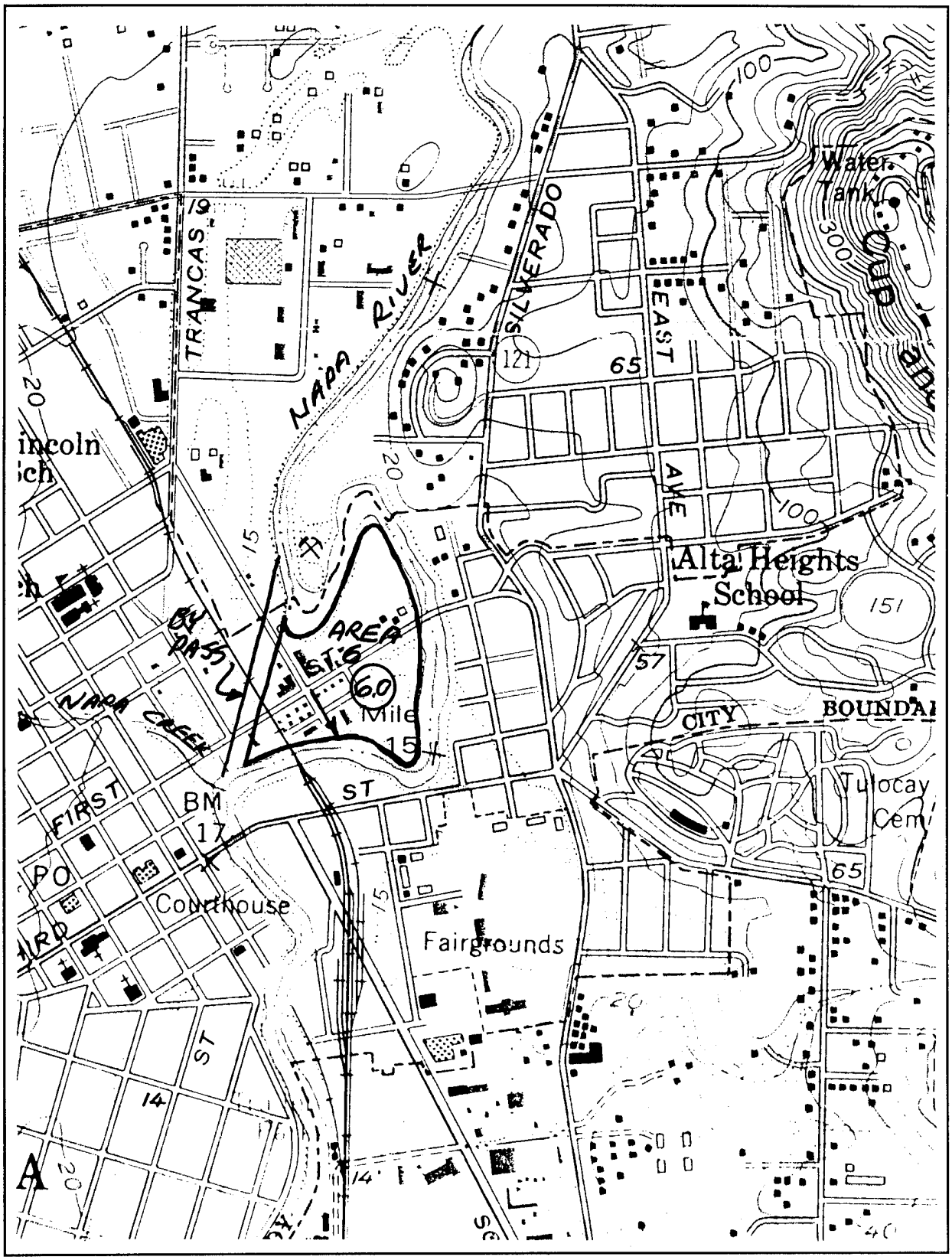

Plate 29 Napa Interior Area 6

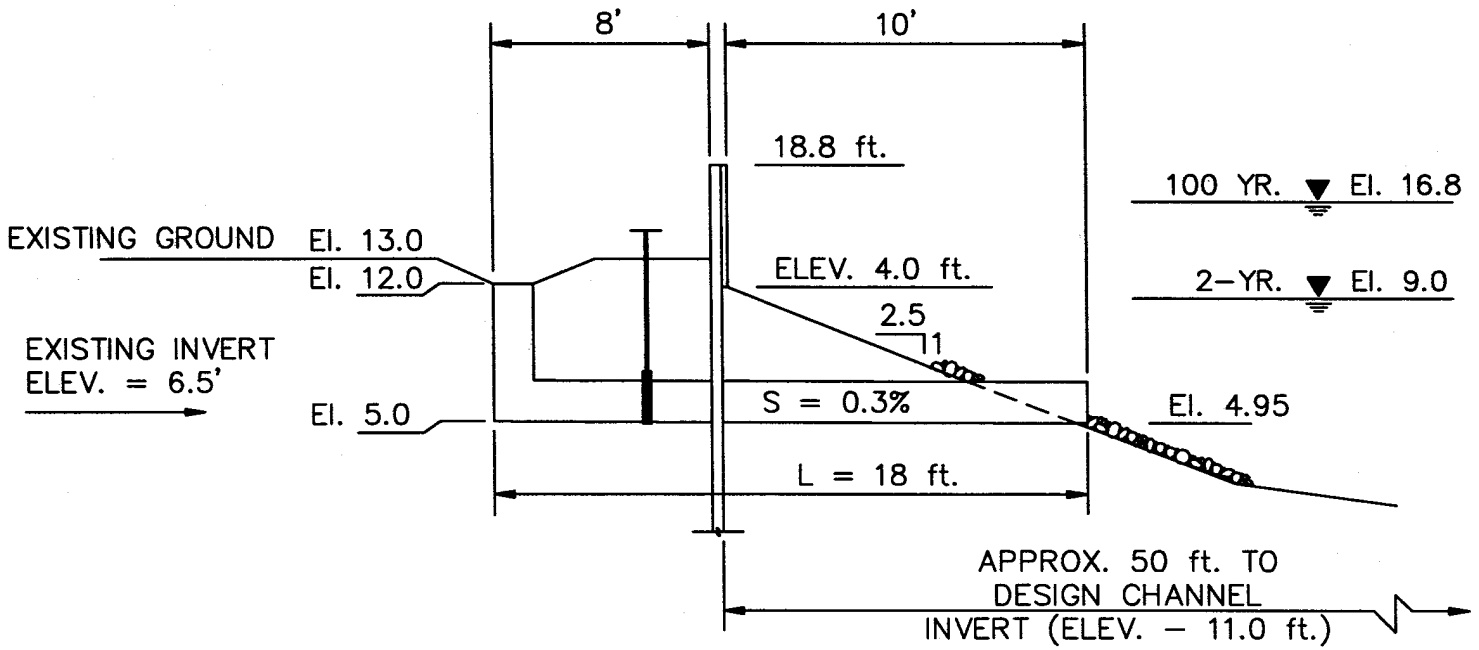

TYPICAL SHEET PILE WALL

AREA 6

EXISTING OUTLET: 1-27" RCP
DESIGNATION: 6.0 (PRIMARY)
LOCATION: McKINSTRY ST.
BANK: WEST (CUT OFF AREA)
STATION: 268.0+515.0=783.0

Min Facility: 1-36" RCP W/Drop inlet.

GPO 784-05 37/00 3